Downloaded from http://www.everyspec.com

MIL-STD-1277B
28 December 1983

SUPERSEDING
MIL-STD-1277A
22 July 1970

MILITARY STANDARD

SPLICES, TERMINALS, TERMINAL BOARDS, BINDING POSTS, TERMINAL JUNCTION SYSTEMS, WIRE CAPS; ELECTRICAL

FSC 5940

Downloaded from http://www.everyspec.com

DEPARTMENT OF DEFENSE
WASHINGTON, D.C. 20301

Splices, Clips, Terminals, Terminal Boards, Binding Posts; Electrical

MIL-STD-1277B

1. This Military Standard is mandatory for use by all Departments and Agencies of the Department of Defense.

2. Recommended corrections, additions, or deletions should be addressed to U.S. Army Electronics Command, ATTN: DELET-R-S, Fort Monmouth, N.J. 07703.

Downloaded from http://www.everyspec.com

FOREWARD

1. This standard provides a selection of standard slices, terminals, terminal boards, terminal junction systems, binding posts, and wire caps for use in the design of military equipment.

2. The application information, design characteristics, and dimensional data contained in this standard are offered for guidance only and are not to be considered as mandatory. For specific data on a particular item, reference should be made to the appropriate specification. Addition application information will be added when developed.

Downloaded from http://www.everyspec.com

CONTENTS

			Page
Paragraph	1.	SCOPE	1
	1.1	Scope	1
	1.2	Application	1
	2.	REFERENCED DOCUMENTS	2
	3.	DEFINITIONS	3
	4.	GENERAL REQUIREMENTS	4
	4.1	Choice of types of splices, terminals, terminal boards, binding posts, and terminal junction systems, and wire caps	4
	5.	DETAILED REQUIREMENTS	5
	6.	SUPPLEMENTAL INFORMATION	6
	6.1	Drawing notes	6

SECTIONS

Section	100	Splice	100-1
	200	Terminals, Lug	200-1
	300	Terminals, Feedthru	300-1
	400	Terminals, Stud	400-1
	500	Terminal Boards	500-1
	600	Posts, Binding	600-1
	700	Terminal Junction Systems	700-1
	800	Cap, Wire Stud	800-1

Downloaded from http://www.everyspec.com

1. SCOPE

1.1 Scope. This standard establishes a list for the selection of splices, terminals, terminal boards, binding posts, terminal junction systems, and wire caps designated as preferred for use in new design of military equipment. Complete detail requirements for splices, terminals, terminal boards, binding posts, terminal junction systems and wire caps listed in this standard are covered in the applicable military document listed herein.

1.2 Application. This standard is designed to serve the following purposes.

(a) To provide the equipment designer with a list of conductor splices, lug terminals, feedthru terminals, stud terminals, terminal boards, binding posts, terminal junction systems and wire caps considered by the military departments to be preferred for military applications.

(b) To control and minimize the variety and types of conductor splice, terminals, terminal boards, binding posts, terminal junction systems and wire caps, used in military equipment in order to facilitate effective logistic support of equipment in the field, and to maximize economic support of production of the types listed in this standard.

Downloaded from http://www.everyspec.com

2. REFERENCED DOCUMENTS

2.1 The following documents of the issue in effect on date of invitation for bids or request for proposal, form a part of this standard to the extend specified herein.

SPECIFICATIONS

MILITARY

MIL-T-7099 - Terminals, Lug, and Splice, Crimp Style, Aluminum, for Aluminum Aircraft Wire.

MIL-T-7928 - Terminals, Lug, and Splice, Crimp Style, Copper.

MIL-T-16366 - Electrical Clamps, Lug Terminals and Conductor
Conductor Splices - Pressure Grip.

MIL-P-55149 - Posts, Binding (Insulated and Noninsulated), General Specifications for.

MIL-T-55155 - Terminals, Feedthru (insulated), and Stud (Insulated Non-insulated), General Specifications for.

MIL-T-55156 - Terminals, Lug, Splices, Conductor, Screw Type, General Specifications for.

MIL-T-55164 - Terminal Boards, Molded, Barrier, Screw and Stud Types, and Associated Accessories, General Specification for.

MIL-T-81714 - Terminal Junction Systems, General Specifications for.

STANDARDS

MILITARY

MS17143 - Terminal, Lug, Crimp, Style, Copper Insulated, Rectangular Tongue, Type II, Class 1.

MS17182 - Terminal, Lug, Crimp Style, Copper, Insulated (Servo Components), Type II, Class 1.

Downloaded from http://www.everyspec.com

MS20659 - Terminal, Lug, Crimp Style, Copper, Uninsulated, Ring Tongue, Type I, Class 1.

MS21003 - Terminal, Lug, Uninsulated, Rectangular Tongue, Crimp Style, Copper, Type I, Class 1.

MS21004 - Terminal, Lug, Uninsulated, Rectangular Tongue, Crimp Style, Copper, Type I, Class 1.

MS21005 - Terminal, Lug, Uninsulated, Rectangular Tongue, Two Stud, Crimp Style, Copper, Type I, Class 1.

MS21006 - Terminal, Lug, Uninsulated, Flag Tongue, Crimp Style, Copper, Type I, Class 1.

MS21007 - Terminal, Lug, Uninsulated, Rectangular (Bent 80 Deg.), Crimp Style, Copper, Type 1, Class 1.

MS21008 - Terminal, Lug, Uninsulated, Offset Rectangular Tongue, Crimp Style, Copper, Type I, Class 1.

MS21009 - Terminal, Lug, Uninsulated, Rectangular Tongue, Lipped Side, Crimp Style, Copper, Type 1, Class 1.

MS21010 - Terminal, Lug, Uninsulated, Rectangular Tongue, Lipped Side, Crimp Style, Type 1, Class 1.

MS21011 - Terminal, Lug, Uninsulated, Rectangular Style, Copper, Type 1, Class 1.

MS21012 - Terminal, Lug, Uninsulated, Rectangular Tongue, Lipped End, Crimp Style, Copper, Type 1, Class 1.

MS21013 - Terminal, Lug, Uninsulated, Rectangular Tongue, Off-center Hole, Lipped End, Crimped Style, Copper,Type 1,Class 1.

MS21014 - Terminal, Lug, Uninsulated, Rectangular Tongue, Two-barrel, Crimp Style, Copper, Type 1, Class 1.

Downloaded from http://www.everyspec.com

MS21015	-	Terminal, Lug, Uninsulated, Square Tongue, Lipped End, Rectangular Stud Hole, Crimp Style, Copper Type 1, Class 1.
MS25036	-	Terminal, Lug, Crimp Style, Copper, Insulated, Ring Tongue, Bell Mouthed, Type II, Class.
MS25189	-	Terminal 1, Lug, Flag Type, Crimp Style, Copper, Class 1 (ASG)
MS25435	-	Terminal Lug, Crimp Style, Straight Type for Aluminum Aircraft Wire, Class 1.
MS25436	-	Terminal Lug, Crimp Style, 90% Upright Type, for Aluminum Aircraft Wire, Class 1.
MS25437	-	Terminal Lug, Crimp Style, Left Angle Type, for Aluminum Aircraft Wire, Class 1.
MS25438	-	Terminal Lug, Crimp Style, Right Angle Type, for Aluminum Aircraft Wire, Class 1.
MS25439	-	Splice Permanent Crimp Style, 2 Way Type, for Aluminum Aircraft Wire, Class 1.
MS27212	-	Terminal Board, Assembly, Milded-in-Stud, Electric.
MS35430	-	Terminal, Lug, Solder Type, Copper Stamping, One Hole.
MS35431	-	Terminal, Lug, Solder Type, Copper Stamping, One Hole, Flat.
MS35434	-	Terminal, Lug, Solder Type, Copper Stamping, One Hole, Flat.
MS35436	-	Terminal, Lug, Solder Type, Copper Stamping, Insulation Grip, One Hole.
MS35438	-	Terminal, Lug, Solder Type, Copper Stamping, Insulation Grip,One Hole, Flag.

Downloaded from http://www.everyspec.com

MS35440	-	Terminal, Lug, Solder Type, Copper Stamping, Insulation Grip, Slotted.
MS35444	-	Terminal, Lug, Solder Type, Copper Stamping, Two Hole.
MS35446	-	Terminal, Lug, Solder Type, Copper Tubing, One Hole.
MS35447	-	Terminal, Lug, Solder Type, Copper Tubing, One Hole, 45 Degrees.
MS35448	-	Terminal, Lug, Solder Type, Copper Tubing, One Hole, 90 Degrees.
MS35449	-	Terminal, Lug, Solder Type, Copper Tubing, Two Hole.
MS75004	-	Adaptor, Battery Terminal,(Storage Battery).
MS77066	-	Terminal, Lug, Solder Type, Phoshor Bronze Stamping, Locking Type, 30 Degrees, One Hole.
MS77067	-	Terminal, Lug, Solder Type, Phosphor Bronze Stamping, Locking Type, Flat, Two Hole
MS77068	-	Terminal, Lug, Solder Type, Phosphor Bronze Stamping, Locking Type, 45 Degree, Two Holes.
MS77069	-	Terminal, Lug, Solder Type, Phosphor Bronze Stamping, Locking Type, 30 Degrees, One Hole.
MS77070	-	Terminal, Lug, Solder Type, Phosphor Bronze Stamping, Locking Type, Flat, One Hole.
MS77071	-	Terminal, Lug, Solder Type, Phosphor Bronze Stamping, Locking Type, 90% Degrees, One Hole.
MS77072	-	Terminal, Lug, Solder Type, Phosphor Bronze Stamping, Locking Type, Flat, One Hole.

Downloaded from http://www.everyspec.com

MS77074 - Terminal, Lug, Solder Type, Phosphor Bronze Stamping, Insulation Grip, Locking Type.

(Copies of specifications, standards, drawings, and publications required by contractors in connection with specific procurement functions should be obtained from the procuring activity or as directed by the contracting officer.)

Downloaded from http://www.everyspec.com

3. DEFINITIONS

3.1 The meanings of the terms used in this standard are those commonly accepted in engineering practice.

Downloaded from http://www.everyspec.com

4. GENERAL REQUIREMENTS

4.1 Choice of types of slices, terminals, terminal boards, binding posts terminal junction systems and wire caps. The variety of the types of items used in any particular equipment shall be the minimum necessary to obtain satisfactory performance with good design practices. The items identified in this standard meet the criteria for standard types (see 4.3).

4.2 Conflict of requirements. In the event of conflict between technical requirements of conductor splices, terminals, terminal boards, binding posts, terminal junction systems and wire caps described in this standard and the applicable specification, the specification shall govern.

4.3 Criteria for inclusion in this standard. The criteria for inclusion of conductor splices, terminals, terminal boards, binding posts, terminal junction system and wire caps in this standard are as follows:

(a) The item shall be the best type available for general use in military equipment.
(b) Coordinated military specifications shall be available.
(c) The item or items shall have been in supply.
(d) There shall be at least one available source.

Downloaded from http://www.everyspec.com

5. DETAILED REQUIREMENTS

5.1 All essential requirements for specific items covered in this standard are contained in the section pertinent to the applicable type.

Downloaded from http://www.everyspec.com

6. SUPPLEMENTAL INFORMATION

6.1 Drawing notes. The following notes are applicable to all figures included in this standard:

6.1.1 Dimensions are in inches.

6.1.2 Metric equivalents (to the nearest .01 mm) are given for general information only and are based upon 1 inch = 25.4 mm.

6.1.3 Millimeters are in parentheses.

6.1.4 Dimensions shown of figures are for reference purposes only. See applicable document for tolerances.

Custodians:

Army - ER
Navy - SH
Air Force- 85

Review Activities:

Army - MI, AR
Navy AS, OS, EC
Air Force - 11,19,99

User Activities:

Army - AT
Navy - MC
Air Force

Preparing Activity:

Army - ER

(Project 5940-0959)

Downloaded from http://www.everyspec.com

SECTION 100

SPLICE

Section		Applicable document
101	Splices, Conductor, Screw Type	MIL-T-55156
102	Splicer, Conductor, Cable Connector, Butt-Crimp.	MIL-T-16366
103	Terminal, Lug and Splice, Crimp Style, Copper	MIL-T-7928
104	Splice, Permanent, Crimp Style, Copper, Insulated, Environment Resistant.	MIL-S-81824
105	Splice, Conductor, Electric, (Permanent, Crimp Style, Copper, Insulated, Type II, Class I).	MIL-T-7928
106	Splice, Shield Termination, Solder Style, Insulated, Heat Shrinkable	MIL-S-83519

Downloaded from http://www.everyspec.com

(This page left blank)

Downloaded from http://www.everyspec.com

SECTION 101

SPLICES, CONDUCTOR, STYLE LP03

MIL-T-55156/3

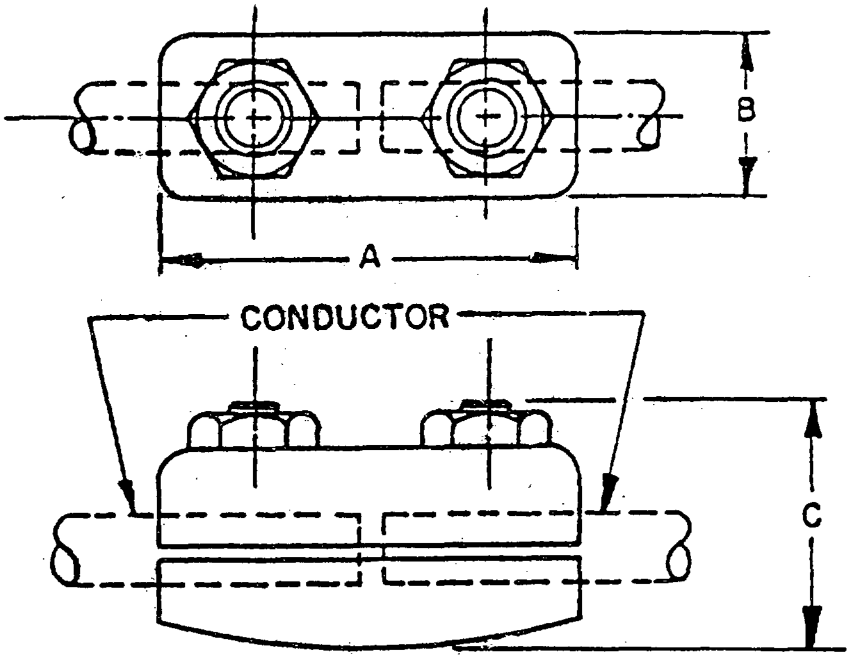

Type designation	Terminal size	Dimensions A max	Dimensions B max	Dimensions C max	Rated current amps, max	Voltage drop volt, max	Tensile strength pounds, max
LP03S011	0	2.25 (57.15)	1.31 (33.27)	1.31 (33.27)	345	.021	530
LP03S012	00	2.50 (63.50)	1.44 (36.58)	1.44 (36.58)	400	.021	570
LP03S013	000	2.50 (63.50)	1.44 (36.58)	1.44 (36.58)	465	.021	650
LP030S14	0000	2.75 (69.85)	1.81 (45.97)	1.81 (45.97)	540	.021	750
LP03S015	350 MCM	2.75 (69.85)	1.81 (45.97)	1.81 (45.97)	670	.021	875
LP03S016	400 MCM	3.12 (79.25)	2.06 (52.32)	2.06 (52.32)	740	.021	1200
LP03S018	650 MCM	3.75 (95.25)	2.56 (65.02)	2.56 (65.02)	1,000	.021	1850
LP03S019	800 MCM	3.75 (95.25)	2.56 (65.02)	2.56 (65.02)	1,190	.021	2160
LP03S020	1,000 MCM	4.25 (107.95)	2.69 (68.33)	2.69 (68.33)	1,375	.021	2406
LP03S021	1,600 MCM	5.38 (136.65)	3.88 (98.55)	3.88 (98.55)	1,800	.021	2800

Downloaded from http://www.everyspec.com

SPLICES, CONDUCTOR, STYLE LP04

MIL-T-55156/4

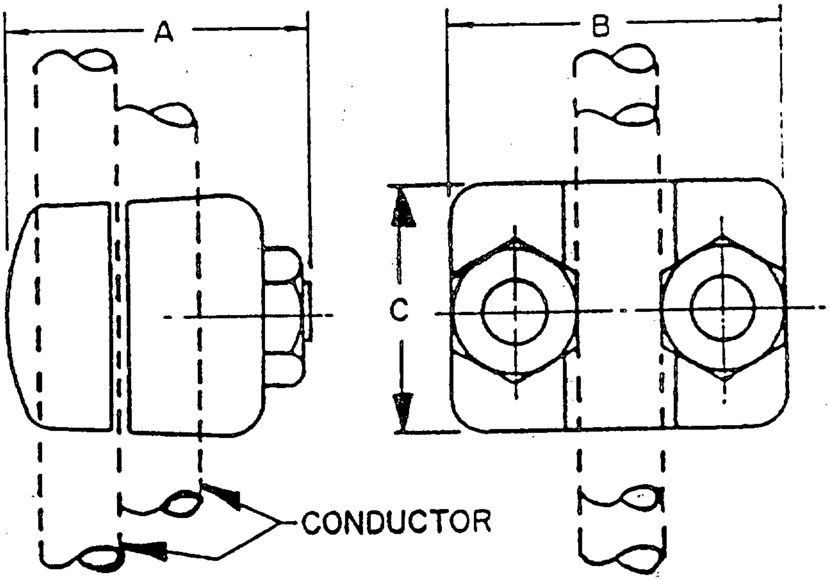

Type designation	Terminal size	Dimensions A max	Dimensions B max	Dimensions C max	Rated current amps, max	Voltage drop volt, max	Tensile strength pounds, max
LP04S002	12-10	1.06 (26.92)	0.75 (19.05)	0.62 (15.75)	60	.021	115
LP04S004	8	1.06 (26.92)	0.75 (19.05)	0.75 (19.05)	107	.021	180
LP04S005	6	1.31 (33.27)	0.88 (22.35)	0.75 (19.05)	129	.021	220
LP04S007	4	1.38 (35.05)	1.00 (25.40)	0.88 (22.35)	172	.021	325
LP04S009	2	1.88 (47.75)	1.12 (28.45)	0.94 (23.88)	230	.021	400
LP04S010	1	1.88 (47.75)	1.12 (28.45)	0.94 (23.88)	270	.021	400
LP04S011	0	2.44 (61.98	1.62 (41.15)	1.38 (35.05)	314	.021	450
LP04S012	00	2.44 (61.98)	1.62 (41.15)	1.38 (35.05)	365	.021	450
LP04S013	000	2.44 (61.98)	1.75 (44.45)	1.50 (38.10)	423	.020	450
LP04S014	0000	2.62 (66.55)	2.31 (58.67)	1.62 (41.15)	495	.020	500
LP04S016	400 MCM	3.38 (85.85)	2.50 (63.50)	1.88 (47.75)	672	.020	550

Downloaded from http://www.everyspec.com

SPLICES, CONDUCTOR, STYLE LP05

MIL-T-55156/5

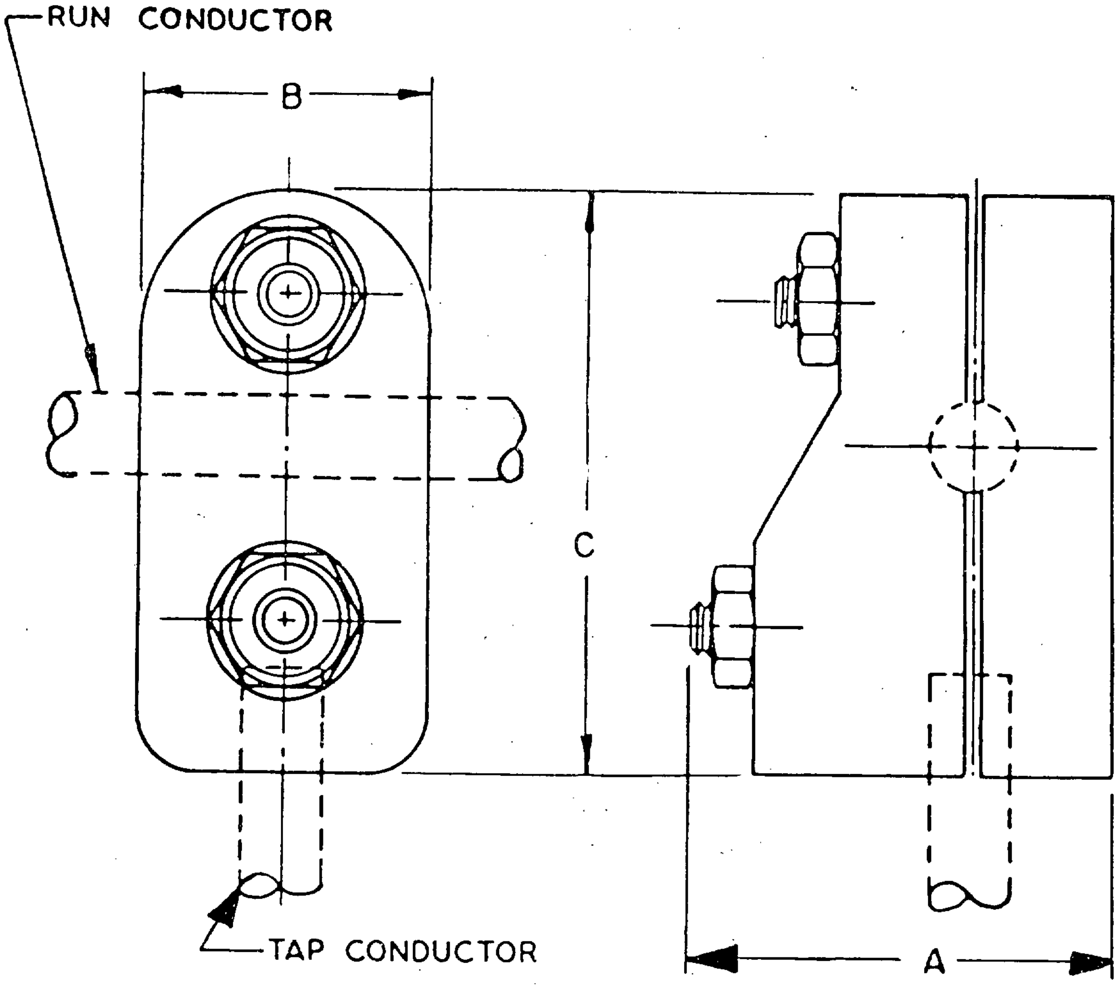

Downloaded from http://www.everyspec.com

PART NUMBER	TERMINAL SIZE RUN CONDUCTOR	TERMINAL SIZE TAP CONDUCTOR	DIMENSIONS A MAX	DIMENSIONS B MAX	DIMENSIONS C MAX	RATED CURRENT	VOLT DROP	TENSILE STRENGTH RUN	TENSILE STRENGTH TAP
LP05S010	1	2				253	.025	490	450
LP05S011	1	1	1.69	1.75	3.12	300	.023	490	490
LP05S018	00	00	(42.93)	(44.45)	(79.25)	400	.023	570	570
LP05S019	000	2				253	.025	650	450
LP05S025	0000	1				300	.023	750	490
LP05S026	0000	0				345	.023	750	350
LP05S027	0000	00				400	.023	750	570
LP05S028	0000	000				465	.023	750	650
LP05S029	0000	0000				540	.023	750	750
LP05S030	300 MCM	2	1.94	2.00	3.50	253	.025	875	450
LP05S031	300 MCM	1	(49.28)	(50.80)	(88.90)	300	.023	875	490
LP05S032	300 MCM	0				345	.023	875	530
LP05S033	300 MCM	00				400	.023	875	570
LP05S034	300 MCM	000				465	.023	875	650
LP05S035	300 MCM	0000				540	.023	875	750
LP05S036	300 MCM	300 MCM				595	.023	875	875
LP05S037	400 MCM	2				253	.025	1,200	450
LP05S038	400 MCM	1				300	.023	1,200	490
LP05S039	400 MCM	0				345	.023	1,200	530
LP05S040	400 MCM	00	2.38	2.31	4.00	400	.023	1,200	570
LP05S041	400 MCM	000	(60.45)	(58.67)	(101.6)	465	.023	1,200	650
LP05S042	400 MCM	0000				540	.023	1,200	750
LP05S043	400 MCM	300 MCM				595	.023	1,200	875
LP05S045	400 MCM	400 MCM				740	.023	1,200	1,200
LP05S055	500 MCM	500 MCM				740	.023	1,475	1,200
LP05S068	700 MCM	2				253	.023	1,850	450
LP05S069	700 MCM	1				300	.023	1,850	490
LP05S070	700 MCM	0				345	.023	1,850	530
LP05S072	700 MCM	000				465	.023	1,850	650
LP05S070	700 MCM	0000				540	.023	1,850	750
LP05S074	700 MCM	300 MCM	2.62	3.00	5.00	595	.023	1,850	875
LP05S075	700 MCM	350 MCM	(66.55)	(76.20)	(127.0)	595	.023	1,850	875
LP05S076	700 MCM	400 MCM				740	.023	1,850	1,200
LP05S077	700 MCM	500 MCM				740	.023	1,850	1,200
LP05S078	700 MCM	600 MCM				860	.023	1,850	1,475
LP05S079	700 MCM	700 MCM				1,000	.023	1,850	1,850
LP05S091	750 MCM	700 MCM				1,000	.023	1,850	1,850
LP05S140	1,250 MCM	000				465	.023	2,400	650
LP05S141	1,250 MCM	0000				540	.023	2,400	750
LP05S142	1,250 MCM	300 MCM				595	.023	2,400	875
LP05S143	1,250 MCM	350 MCM				595	.023	2,400	875
LP05S144	1,250 MCM	400 MCM				740	.023	2,400	1,200
LP05S145	1,250 MCM	500 MCM				740	.023	2,400	1,200
LP05S146	1,250 MCM	600 MCM	3.25	3.88	6.19	860	.023	2,400	1,475
LP05S147	1,250 MCM	700 MCM	(82.55)	(98.55)	(157.23)	1,000	.023	2,400	1,850
LP05S148	1,250 MCM	750 MCM				1,000	.023	2,400	1,850
LP05S149	1,250 MCM	800 MCM				1,000	.023	2,400	1,850
LP05S150	1,250 MCM	900 MCM				1,190	.023	2,400	2,160
LP05S151	1,250 MCM	1,000 MCM				1,190	.023	2,400	2,160
LP05S152	1,250 MCM	1,250 MCM				1,375	.023	2,400	2,400

Downloaded from http://www.everyspec.com

SECTION 102

SPLICER, CONDUCTOR, CABLE CONNECTOR, BUTT-CRIMP, TYPE CCBC

MIL-T-16366

Type CCBC splicers shall be furnished in accordance with the following table. They shall be of a design which connects the ends of two cables in such a manner that the ends are butted, or butted against cable stops, and the axes of the cables coincide.

Number to appear on splicer	Navy cable		Size		
	Standard cable size designation	Rating (max)	Overall length (min)	Overall diameter	Length of each barrel (min)
		amperes			
1-2	3/5 (1)	4	0.62 (15.75)	0.15 (3.81)	0.25 (6.35)
	3/5 (7)	4			
	1 (1)	7			
	1 (7)	8			
	1 (10)	8			
	1-1/2 (1)	11			
	1-1/2 (7)	11			
	1-1/2 (16)	11			
	1-1/2 (41)	11			
	2 (7)	11			
2-1/2-4	2-1/2 (1)	18	0.62 (15.75)	0.15 (3.81)	0.25 (6.35)
	2-1/2 (19)	17			
	2-1/2 (26)	18			
	3 (7)	21			
	4 (1)	30			
	4 (19)	29			
	4 (41)	30			
6-9	6 (7)	48	0.75 (19.05)	0.21 (51.05)	0.31 (7.87)
	6 (19)	45			
	9 (7)	66			
	9 (37)	69			

Downloaded from http://www.everyspec.com

Number to appear on splicer	Navy cable		Size		
	Standard cable size designation	Rating (max)	Overall length (min)	Overall diameter	Length of each barrel (min)
		amperes			
14	14 (7)	92	1.75 (44.45)	0.25 (6.35)	0.81 (20.57)
23	23 (7)	117	1.75 (44.45)	0.31 (7.87)	0.81 (20.57)
30	30 (19)	142	2.38 (60.45)	0.31 (7.87)	1.12 (28.45)
40	40 (19)	165	2.38 (60.45)	0.31 (7.87)	1.12 (28.45)
50	50 (19)	189	2.62 (66.55)	0.38 (9.65)	1.25 (31.75)
60	60 (37)	215	2.62 (66.55)	0.44 (11.18)	1.25 (31.75)
75	75 (37)	253	2.88 (73.15)	0.50 (12.70)	1.38 (35.05)
100	100 (61)	300	2.88 (73.15)	0.50 (12.70)	1.38 (35.05)
125	125 (61)	345	3.12 (79.25)	0.56 (14.22)	1.50 (38.10)
150	150 (61)	400	3.12 (79.25)	0.62 (15.75)	1.50 (38.10)
200	200 (61)	465	3.38 (85.85)	0.69 (17.53)	1.62 (41.15)
250	250 (61)	540	3.38 (85.85)	0.75 (19.05)	1.62 (41.15)
300	300 (91)	595	4.12 (104.65)	0.81 (20.57)	2.00 (50.80)
350	350 (91)	670	4.12 (104.65)	0.88 (22.35)	2.00 (50.80)
400	400 (127)	740	4.38 (111.25)	0.94 (23.88)	2.12 (53.85)
500	500 (127)	860	4.62 (117.35)	1.06 (26.92)	2.25 (57.15)
650	650 (127)	1,000	5.75 (146.05)	1.25 (31.75)	2.81 (71.42)
800	800 (127)	1,190	6.00 (152.40)	1.38 (35.05)	2.94 (74.68)
1,000	1,000 (127)	1,375	6.12 (155.45)	1.50 (38.10)	3.00 (75.20)
1,600	1,600 (127)	1,800	6.75 (171.45)	1.94 (49.28)	3.19 (81.03)

Downloaded from http://www.everyspec.com

SECTION 103

SPLICE, CONDUCTOR, QUICK DISCONNECT, INSULATED

MS27429

(APPLICABLE SPECIFICATION: MIL-T-7928)

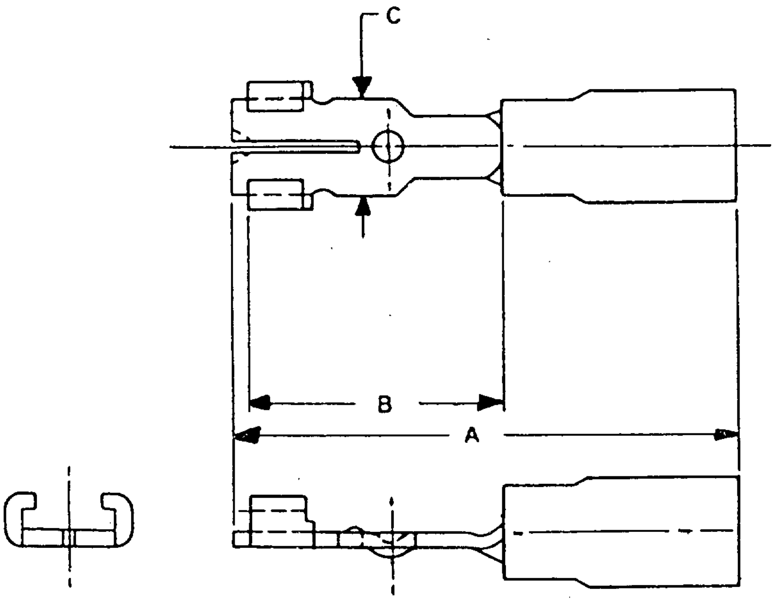

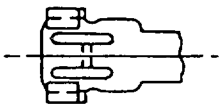

-3 CONFIGURATION

Part Number	Wire Size	A max	B max	C max
MS27429-1	22-20-18	.540(13.72)	.186(4.73)	.190(4.83)
MS27429-2	16-14	.540(13.72)	.186(4.73)	.190(4.83)
MS27429-3	12-10	.760(19.30)	.315(8.00)	.300(7.62)

Downloaded from http://www.everyspec.com

(This page left blank)

Downloaded from http://www.everyspec.com

SECTION 104

SPLICE, ELECTRIC, PERMANENT, CRIMP STYLE COPPER
INSULATED, ENVIRONMENT RESISTANT, CLASS 1

(APPLICABLE SPECIFICATION: MIL-S-81824/1)

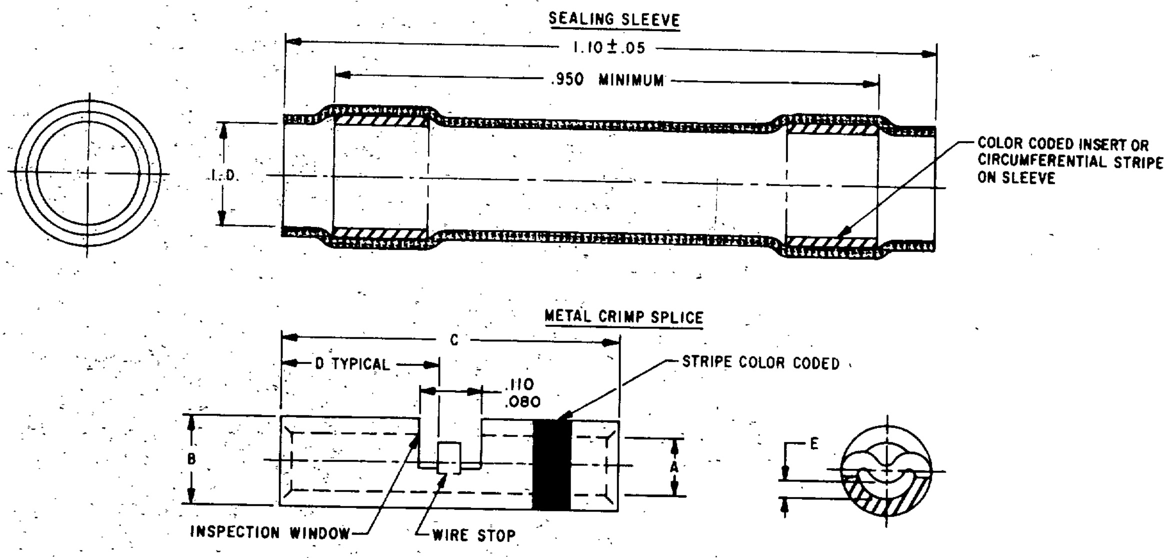

Part Number	Wire Range	A	B	C	D
M81824/1-1	26-24-22-20	.053(1.35) .045(1.14)	.080(2.03) .075(1.91)	.510(12.95) .490(12.45)	.245(6.22) .225(5.72)
M81824/1-2	20-18-16	.070(1.78) .063(1.60)	.107(2.72) .100(2.55)	.585(14.86) .565(14.35)	.280(7.11) .260(6.60)
M81824/1-3	16-14-12	.105(2.67) .095(2.41)	.155(3.94) .146(3.70)	.585(14.86) .565(14.35)	.280(7.11) .260(6.60)

Downloaded from http://www.everyspec.com

SPLICE, ELECTRIC, PERMANENT, CRIMP STYLE COPPER, INSULATED, ONE PIECE, ENVIRONMENT RESISTANT, CLASS I

(APPLICABLE SPECIFICATION: MIL-S-81824/2)

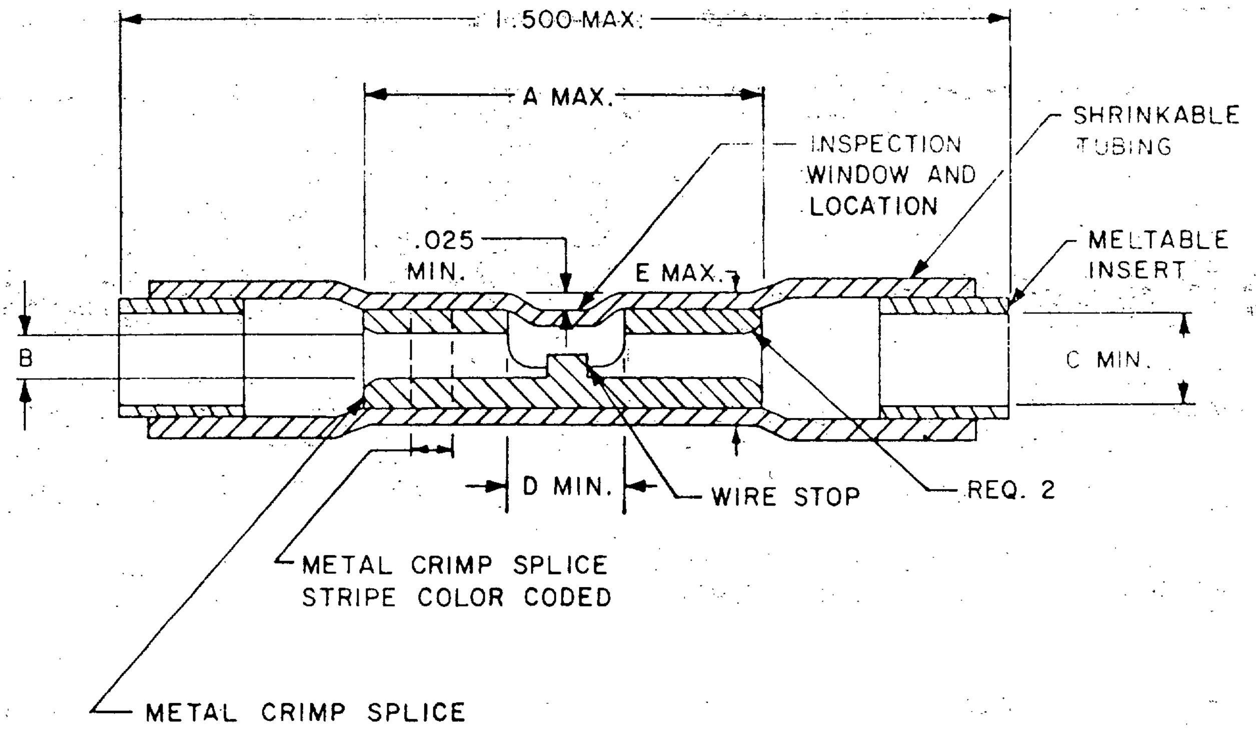

Part Number	Wire Range	A	B	C	D
M81824/2-1	26-24-22-20	.515(13.08)	.055(1.40) .043(1.09)	.085(2.16)	.120(3.05)
M81824/2-2	20-18-16	.590(14.90)	.075(1.91) .060(1.52)	.110(2.79)	.130(3.30)
M81824/2-3	16-14-12	.590(14.90)	.110(2.79) .090(2.29)	.170(4.32)	.135(3.43)

Downloaded from http://www.everyspec.com

SECTION 105

TERMINALS, LUG AND SPLICES, CONDUCTOR, CRIMP STYLE, SPLICE, ELECTRIC, (PERMANENT, TYPE II, CLASS 1) FOR 105° C TOTAL CONDUCTOR TEMPERATURE

(Applicable Specification: MIL-T-7928/5)

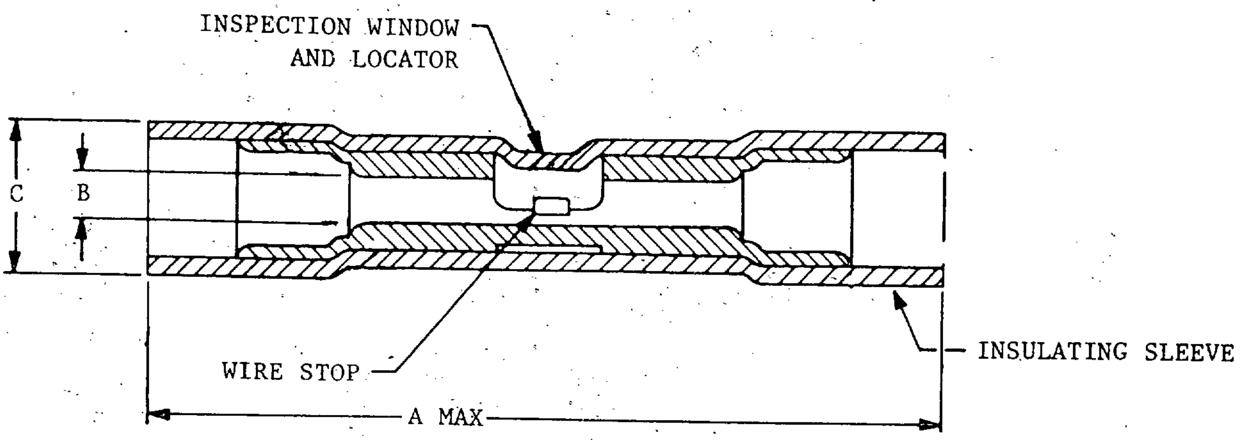

PART NUMBER	WIRE RANGE	A MAX	B	C	COLOR OF RINGS OR STRIPES
M7928/5-1	26-24	.860(21.89)	.033(.838) .027(.686)	.160(4.06) .125(3.17)	Yellow
M7928/5-2	24-20	1.035(26.29)	.055(1.40) .043(1.09)	.170(4.32) .135(3.43)	Clear
M7928/5-3	22-18	1.300(33.02)	.073(1.85) .052(1.32)	.220(5.59) .160(4.06)	Red
M7928/5-4	16-14	1.300(33.02)	.095(2.41) .081(2.06)	.260(6.60) .180(4.57)	Blue
M7928/5-5	12-10	1.700(43.18)	.139(3.53) .129(3.28)	.320(8.13) .250(6.35)	Yellow

* Not for Navy use. For Navy use MIL-S-81824

Downloaded from http://www.everyspec.com

TERMINALS, LUG AND SPLICES, CONDUCTOR, CRIMP STYLE SPLICE, ELECTRIC, (PERMANENT, TYPE II, CLASS 1) FOR 150° TOTAL CONDUCTOR TEMPERATURE

(Applicable Specification: MIL-T-7928/6)

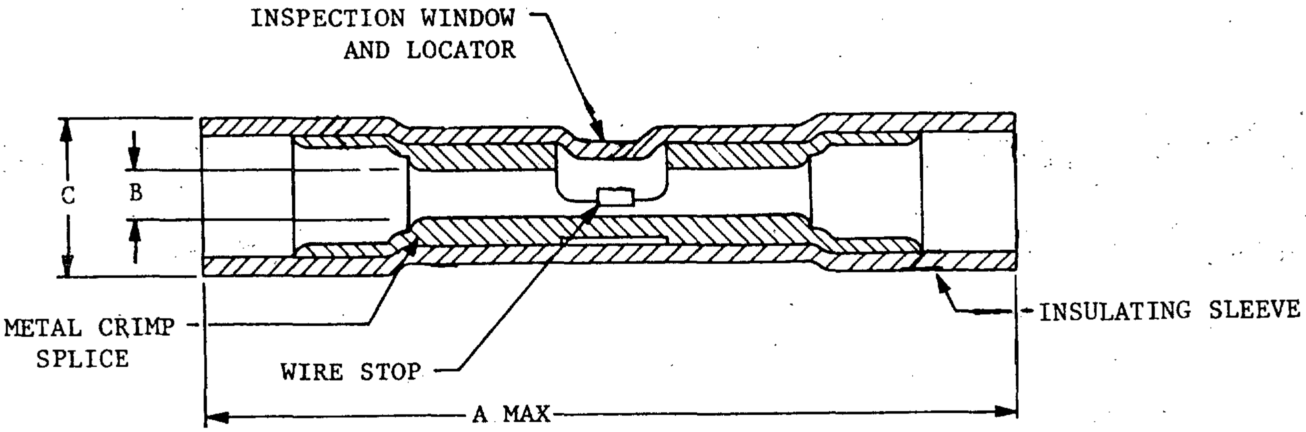

PART NUMBER	WIRE RANGE	A MAX	B	C	COLOR OF RINGS OR STRIPES
M7928/6-1	26-24	.860(21.84)	.033(.838) .027(.686)	.160(4.06) .125(3.17)	Yellow
M7928/6-2	24-20	1.035(26.29)	.055(1.40) .043(1.09)	.170(4.32) .135(3.43)	White
M7928/6-3	22-18	1.300(33.02)	.073(1.85) .052(1.32)	.220(5.59) .160(4.06)	Red
M7928/6-4	16-14	1.300(33.02)	.095(2.41) .081(2.06)	.260(6.60) .180(4.57)	Blue
M7928/6-5	12-10	1.700(43.18)	.139(3.53) .129(3.28)	.320(8.13) .250(6.35)	Yellow

Downloaded from http://www.everyspec.com

SECTION 106

SPLICE, SHIELD TERMINATION, SOLDER STYLE
INSULATED, HEAT-SHRINKABLE, ENVIRONMENT RESISTANT
FOR CABLES RATED AT 105° AND ABOVE

(APPLICABLE SPECIFICATION: MIL-S-83519/1)

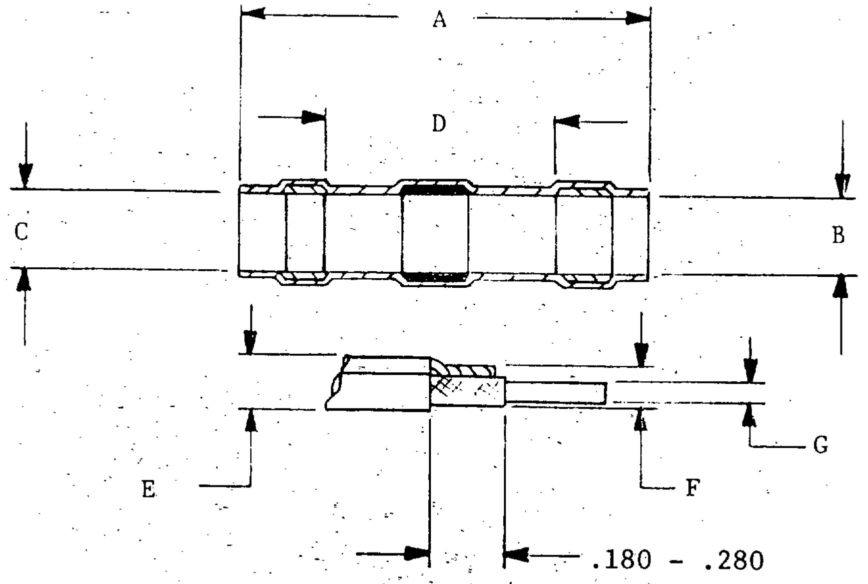

CABLE DIAMETER RANGE AND PREPARATION MEASUREMENTS

TABLE I. Construction details

PART NO.	A	B MIN	C MIN	D MIN	E MAX	F MIN	G MIN
M83519/1-1	.650	.075	.105	.325	.105	.050	.020
M83519/1-2	.650	.105	.145	.325	.145	.070	.030
M83519/1-3	.650	.170	.200	.325	.200	.100	.050
M83519/1-4	.750	.235	.255	.325	.255	.125	.070
M83519/1-5	.750	.275	.300	.325	.300	.160	.100

Downloaded from http://www.everyspec.com

SPLICE, SHIELD TERMINATION, SOLDER STYLE
INSULATED, HEAT-SHRINKABLE, ENVIRONMENT RESISTANT
WITH PREINSTALLED M22759/32 LEAD FOR
CABLES RATED AT 105°C AND ABOVE

(APPLICABLE SPECIFICATION: MIL-S-83519

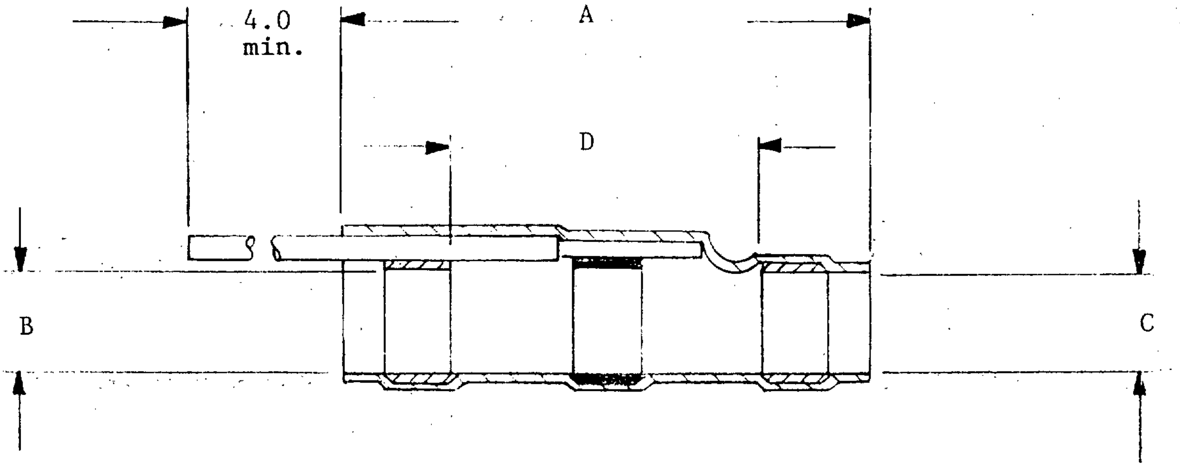

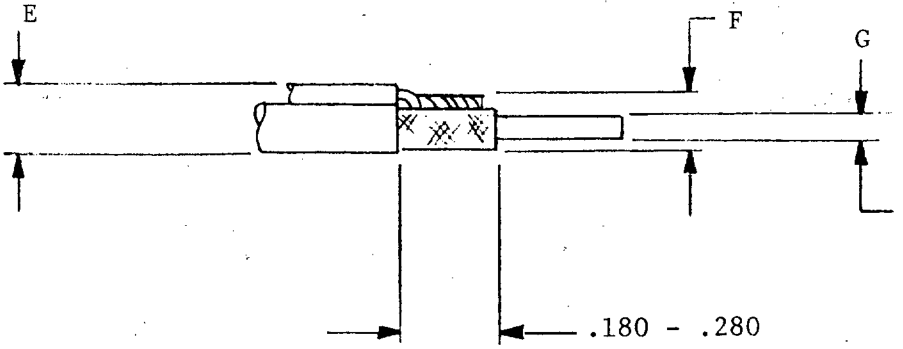

Downloaded from http://www.everyspec.com

MIL-S-83519

TABLE I. Construction details

PART NO.	WIRE GAUGE	A	B MIN	C MIN	D MIN	E MAX	F MIN	G MIN
M83519/2-1	20	.650	.075	.105	.325	.105	.035	.020
M83519/2-2	20	.650	.105	.145	.325	.145	.055	.030
M83519/2-3	20	.650	.170	.200	.325	.200	.075	.050
M83519/2-4	20	.750	.235	.255	.325	.255	.100	.070
M83519/2-5	20	.750	.275	.300	.325	.300	.135	.100
M83519/2-6	22	.650	.075	.105	.325	.105	.035	.020
M83519/2-7	22	.650	.105	.145	.325	.145	.055	.030
M83519/2-8	22	.650	.170	.200	.325	.200	.075	.050
M83519/2-9	22	.750	.235	.255	.325	.255	.100	.070
M83519/2-10	22	.750	.275	.300	.325	.300	.135	.100
M83519/2-11	24	.650	.075	.105	.325	.105	.035	.020
M83519/2-12	24	.650	.105	.145	.325	.145	.055	.030
M83519/2-13	24	.650	.170	.200	.325	.200	.075	.050
M83519/2-14	24	.750	.235	.255	.325	.255	.100	.070
M83519/2-15	24	.750	.275	.300	.325	.300	.135	.100
M83519/2-16	26	.650	.075	.105	.325	.105	.035	.020
M83519/2-17	26	.650	.105	.145	.325	.145	.055	.030
M83519/2-18	26	.650	.170	.200	.325	.200	.075	.050
M83519/2-19	26	.750	.235	.255	.325	.255	.100	.070
M83519/2-20	26	.750	.275	.300	.325	.300	.135	.100

Downloaded from http://www.everyspec.com

(This page left blank)

Downloaded from http://www.everyspec.com

SECTION 200

TERMINALS, LUG

Section		Applicable document
201	Terminals, Lug, Screw Type	MIL-T-55156
202	Terminal, Lug (Storage Battery)	MS75004
203	Terminals, Lug, Crimp Style	MIL-T-7928
204	Terminals, Lug, Cable, Crimp	MIL-E-16366
205	Terminal, Lug, Crimp Style, Copper, Insulated (Synchro/Resolver)	MS17182
206	Terminal, Lug, and Splice, Crimp Style Aluminum for Aluminum Aircraft Wire	MIL-T-709 9
207	Terminal, Lug, Solder, Copper and Phosphor Bronge	MIL-T-15659

Downloaded from http://www.everyspec.com

(This page left blank)

Downloaded from http://www.everyspec.com

SECTION 201

TERMINALS, LUG, STYLE LP01

MIL-T-55156/1

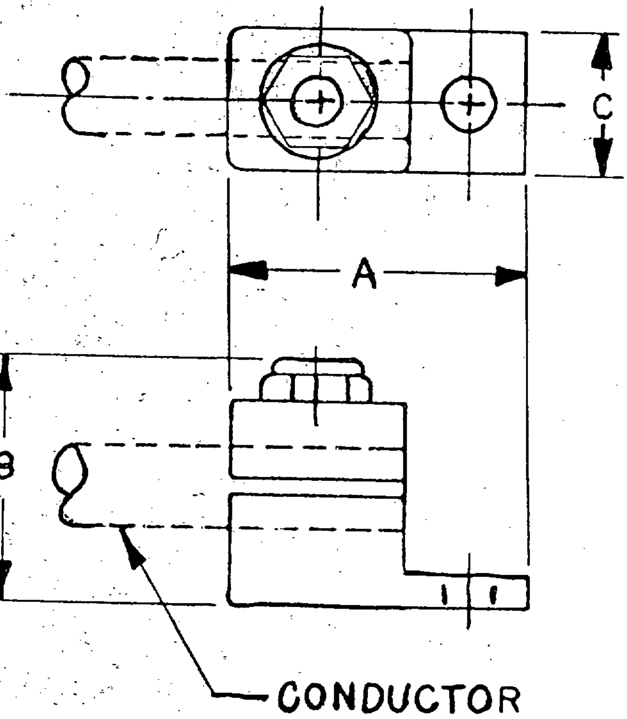

Type designation	Terminal size	Dimensions A max	Dimensions B max	Dimensions C max	Rated current amps, max
LP01L001	14	1.38 (35.05)	0.94 (23.88)	0.62 (15.75)	32
LP01L002	12-10	1.38 (35.05)	0.94 (23.88)	0.62 (15.75)	66
LP01L004	8	1.50 (38.1)	1.06 (26.92)	0.62 (15.75)	117
LP01L005	6	1.50 (38.1)	1.06 (26.92)	0.62 (15.75)	142
LP01L007	4	1.94 (49.28)	1.38 (35.05)	0.88 (22.35)	189
LP01L009	2	1.94 (49.28)	1.38 (35.05)	0.88 (22.35)	253
LP01L010	1	2.25 (57.15)	1.44 (36.58)	0.94 (23.88)	300
LP01L011	0	2.25 (57.15)	1.44 (36.58)	0.94 (23.88)	345
LP01L012	00	2.56 (65.02)	1.56 (39.62)	1.12 (28.45)	400

Downloaded from http://www.everyspec.com

TERMINALS, LUG, STYLE LP02

MIL-T-55156/2

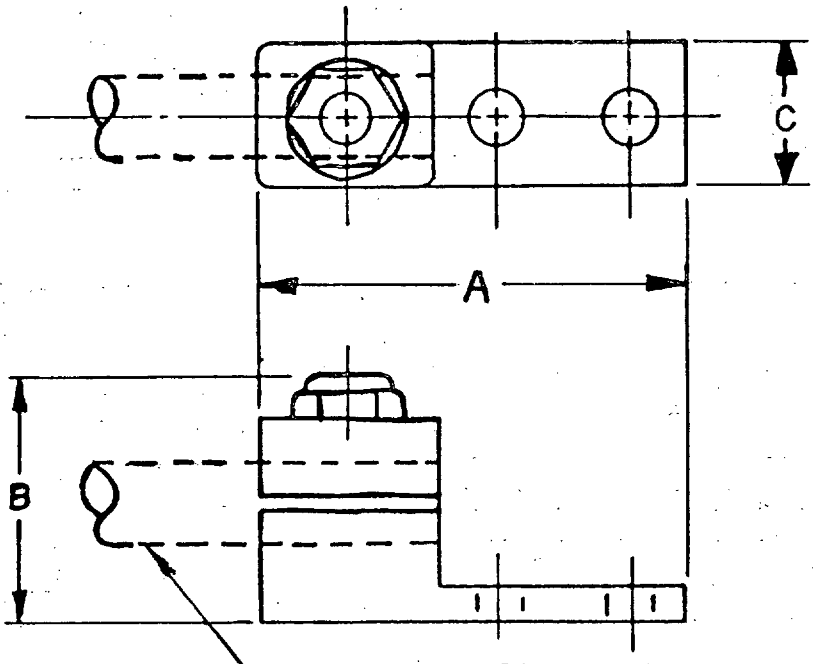

Type designation	Terminal size	Dimensions			Rated current
		A max	B max	C max	
					amps, max
LP02L015	350 MCM	3.88 (98.55)	1.81 (45.97)	1.38 (35.05)	640
LP02L016	400 MCM	4.25 (107.95)	2.12 (53.85)	1.62 (41.15)	740
LP02L018	650 MCM	4.88 (123.95)	2.50 (63.50)	1.81 (45.97)	1000
LP02L019	800 MCM	4.88 (123.95)	2.50 (63.50)	1.81 (45.97)	1190
LP02L020	1000 MCM	5.50 (139.70)	2.69 (68.33)	2.00 (50.8)	1375
LP02L021	1600 MCM	6.25 (158.75)	3.94 (100.08)	2.50 (63.50)	1800

Downloaded from http://www.everyspec.com

TERMINALS, LUG, STYLE LP06

MIL-T-55156/6

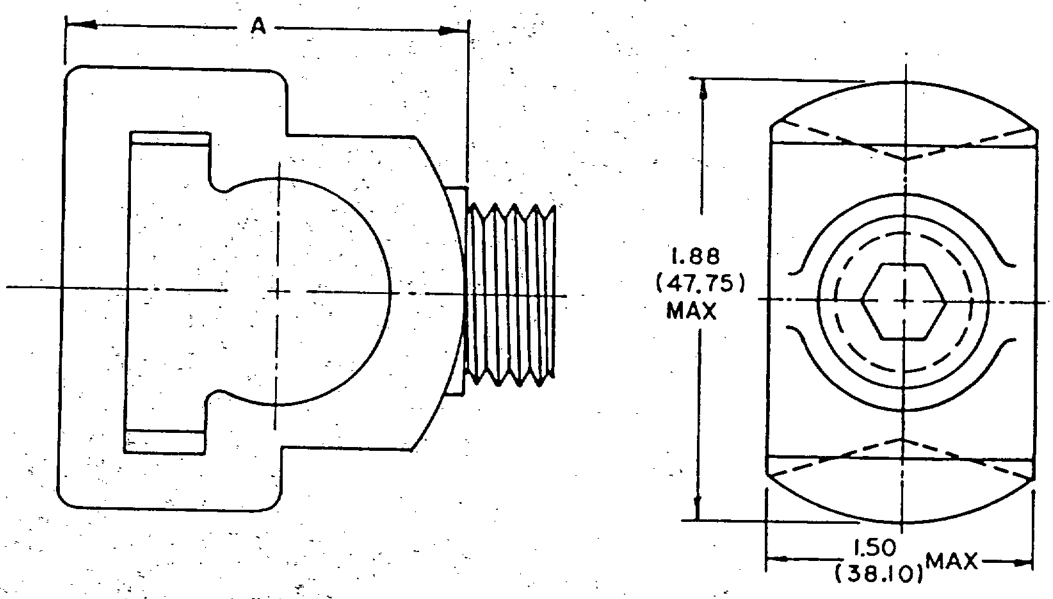

Type designation	Terminal size	Dimension A (max)	Rated current
			amps, max
LP06L001	2	2.00 (50.8)	253
LP06L002	1	2.00 (50.8)	300
LP06L003	0	2.00 (50.8)	345
LP06L004	00	2.06 (52.32)	400
LP06L005	000	2.06 (52.32)	465
LP06L006	0000	2.62 (66.55)	540
LP06L007	300 MCM	2.62 (66.55)	595
LP06L008	350 MCM	2.62 (66.55)	670
LP06L009	400 MCM	2.62 (66.55)	740

Downloaded from http://www.everyspec.com

(This page left blank)

Downloaded from http://www.everyspec.com

SECTION 202

TERMINAL, LUG
(STORAGE BATTERY)

MS75004

(APPLICABLE SPECIFICATION MIL-A-55059)

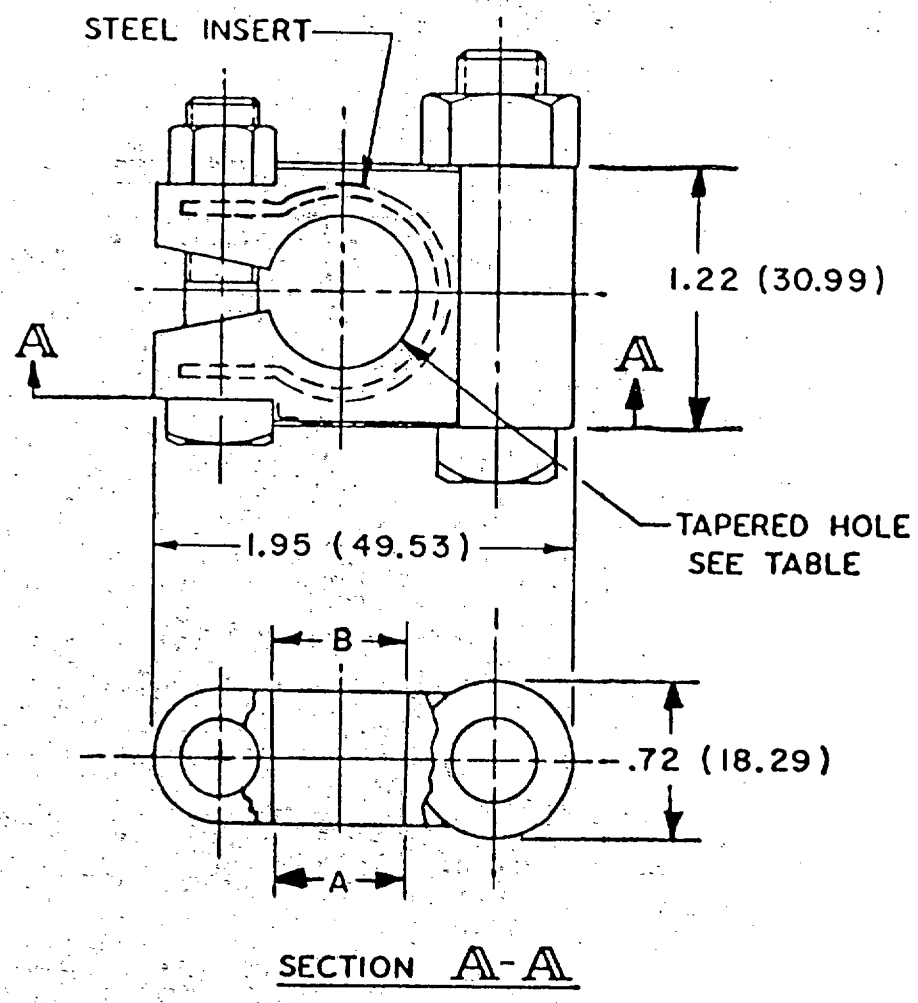

Part number	Dimensions				Terminal designation
	A dia		B dia		
	max	min	max	min	
MS75004-1	.695 (17.65)	.690 (17.53)	.764 (19.41)	.759 (19.28)	positive
MS75004-2	.633 (16.08)	.628 (15.95)	.702 (17.83)	.697 (17.70)	negative

Downloaded from http://www.everyspec.com

(This page left blank)

Downloaded from http://www.everyspec.com

SECTION 203

TERMINAL, LUG, CRIMP STYLE, COPPER, INSULATED
RECTANGULAR TONGUE, TYPE II, CLASS 1,
FOR 105° C TOTAL CONDUCTOR TEMPERATURE

MS17143

(APPLICABLE SPECIFICATION: MIL-T-7928)

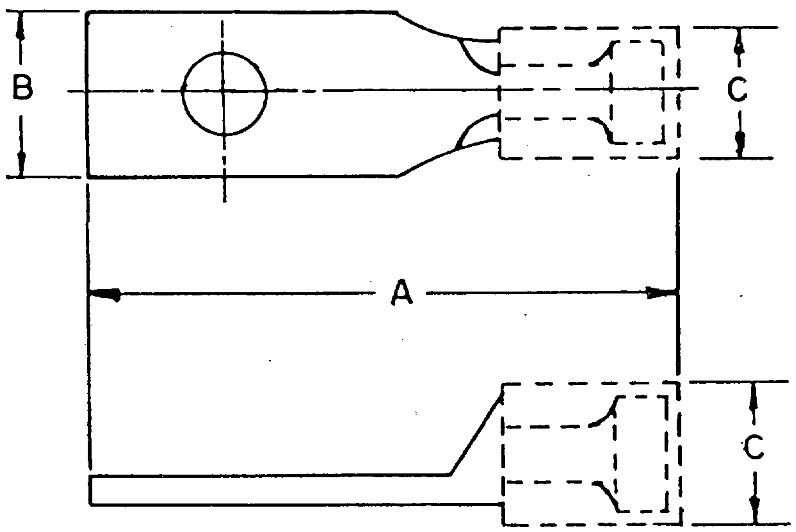

Downloaded from http://www.everyspec.com

Part number	AWG wire size	Stud size	A max	B	C max
MS17143-1	22-18	8	1.359(34.52)	.390(9.91)	.280(7.11)
MS17143-2	16-14	8	1.359(34.52)	.390(9.91)	.280(7.11)
MS17143-3	12-10	8	1.531(38.89)	.390(9.91)	.361(9.17)
MS17143-4	22-18	6	1.109(28.17)	.302(7.67)	.280(7.11)
MS17143-5	16-14	6	1.109(28.17)	.302(7.67)	.280(7.11)
MS17143-6	12-10	6	1.281(32.54)	.302(7.67)	.361(9.17)
MS17143-7	22-18	8	1.109(28.17)	.302(7.67)	.280(7.11)
MS17143-8	16-14	8	1.109(28.17)	.302(7.67)	.280(7.11)
MS17143-9	12-10	8	1.281(32.54)	.302(7.67)	.361(9.17)
MS17143-10	22-18	5	.859(21.82)	.277(7.04)	.280(7.11)
MS17143-11	16-14	5	.859(21.82)	.277(7.04)	.280(7.11)
MS17143-12	12-10	5	1.046(26.57)	.277(7.04)	.361(9.17)
MS17143-13	22-18	6	1.015(25.78)	.237(6.02)	.280(7.11)
MS17143-14	16-14	6	1.015(25.78)	.237(6.02)	.280(7.11)
MS17143-15	12-10	6	1.203(30.56)	.237(6.02)	.361(9.14)
MS17143-16	22-18	4	1.015(25.78)	.237(6.02)	.280(7.11)
MS17143-17	16-14	4	1.015(25.78)	.237(6.02)	.280(7.11)
MS17143-18	12-10	4	1.203(30.56)	.237(6.02)	.361(9.17)
MS17143-19	22-18	4	.796(20.22)	.237(6.02)	.280(7.11)
MS17143-20	16-14	4	.796(20.22)	.237(6.02)	.280(7.11)
MS17143-21	12-10	4	.984(24.99)	.237(6.02)	.361(9.17)
MS17143-22	22-18	6	.859(21.82)	.250(6.35)	.280(7.11)
MS17143-23	22-18	6	.796(20.22)	.296(7.52)	.280(7.11)
MS17143-24	22-18	8	.984(24.99)	.312(7.92)	.280(7.11)
MS17143-25	22-18	10	.906(23.01)	.375(9.53)	.280(7.11)
MS17143-26	26-24	2	.744(18.90)	.182(4.62)	.199(5.05)
MS17143-27	26-24	4	.811(20.60)	.237(6.02)	.199(5.05)
MS17143-28	22-18	2	.744(18.90)	.182(4.62)	.280(7.11)

Downloaded from http://www.everyspec.com

TERMINAL, LUG, CRIMP CTYLE, COPPER, UNINSULATED,
RING TONGUE, TYPE I CLASS 1,
FOR 175°C TOTAL CONDUCTOR TEMPERATURE

MS20659

(APPLICABLE SPECIFICATIONS: MIL-T-7928)

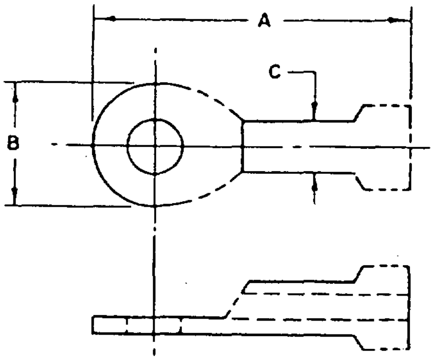

TERMINALS FOR WIRE SIZES 22 TO 14

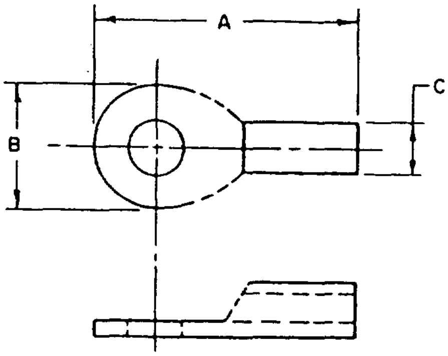

TERMINALS FOR WIRE SIZES 12 TO 0000

Part number	Wire size	Stud size	A max	B max	B min	C dia
MS20659-167	22-18	2	.890(22.61)	.260(6.60)	.178(4.52)	.140(3.56) / .115(2.92)
MS20659-138		4	.890(22.61)	.225(5.72)	.210(5.33)	
MS20659-101		6	.890(22.61)	.225(5.72)	.210(5.33)	
MS20659-102		10	.968(24.59)	.320(8.13	.305(7.75)	
MS20659-161		5/16	1.187(30.15)	.540(13.72)	.520(13.21)	
MS20659-125		3/8	1.308(33.22)	.540(13.72	.520(13.21	
MS20659-162		1/2	1.530(38.86)	.733(18.62)	.703(17.86)	
MS20659-139	16-14	4	.922(23.42)	.255(6.48)	.240(6.10)	.162(4.11) / .145(3.68)
MS20659-103		6	.955(24.26)	.317(8.05)	.302(7.67)	
MS20659-126		6	.922(23.42)	.255(6.48)	.240(6.10)	
MS20659-104		10	.955(24.26)	.317(8.05)	.302(7.67)	
MS20659-163		5/16	1.249(31.72)	.540(13.72)	.520(13.21)	
MS20659-127		3/8	1.290(32.77)	.540(13.72)	.520(13.21)	
MS20659-164		1/2	1.593(40.46)	.733(18.63)	.703(17.86)	
MS20659-165	12-10	6	.955(24.26)	.317(8.05)	.302(7.67)	.230(5.84) / .215(5.46)
MS20659-105		10	.969(24.61)	.380(9.65)	.365(9.27)	
MS20659-106		5/16	1.125(28.58)	.540(13.72)	.520(13.21)	
MS20659-128		3/8	1.172(29.77)	.598(15.19)	.573(14.55)	
MS20659-166		1/2	1.718(43.64)	.733(18.63)	.703(1786)	
MS20659-140	8	8	1.150(29.21)	.429(10.90)	.386(9.80)	.272(6.91) / .260(6.60)
MS20659-107		10	1.1 50(29.21)	.429(10.90)	.386(9.80)	
MS20659-141		1/4	1.219(30.96)	.478(12.14)	.435(11.05)	
MS20659-108		5/16	1.297(32.94)	.590(14.99)	.547(13.89)	
MS20659-129		3/8	1.297(32.94)	.590(14.99)	.547(13.89)	
MS20659-142		1/2	1.545(39.24)	.833(21.06)	.790(20.07)	

Downloaded from http://www.everyspec.com

Part number	Wire size	Stud size	A max	B max	B min	C dia
MS20659-130	6	10	1.312(33.32)	.503(12.78)	.460(11.68)	.316(8.03) / .295(7.49)
MS20659-109		1/4	1.312(33.32)	.503(12.78)	.460(11.68)	
MS20659-131		5/16	1.437(36.50)	.623(15.82)	.580(14.73)	
MS20659-110		3/8	1.437(36.50)	.623(15.82)	.580(14.73)	
MS20659-143		1/2	1.676(42.57)	.833(21.16)	.790(20.07)	
MS20659-144	4	10	1.400(35.56)	.628(15.95)	.585(14.86)	.380(9.65) / .365(9.27)
MS20659-111		1/4	1.400(35.56)	.628(15.95)	.585(14.86)	
MS20659-132		5/16	1.489(37.82)	.648(16.46)	.605(15.37)	
MS20659-112		3/8	1.489(37.82)	.648(16.46)	.605(15.37)	
MS20659-145		1/2	1.721(43.71)	.833(21.16)	.790(20.07)	
MS20659-146	2	10	1.732(43.99)	.711(18.06)	.668(16.97)	.473(1201) / .450(11.43)
MS20659-113		1/4	1.732(43.99)	.711(18.06)	.668(16.97)	
MS20659-147		5/16	1.732(43.99)	.711(18.06)	.668(16.97)	
MS20659-114		3/8	1.732(43.99)	.711(18.06)	.668(16.97)	
MS20659-148		7/16	1.895(48.13)	.804(20.42)	.761(19.33)	
MS20659-133		1/2	1.895(48.13)	.804(20.42)	.761(19.33)	
MS20659-115	1	1/4	1.845(46.86)	.783(19.89)	.740(18.80)	.527(13.39) / .505(12.83)
MS20659-149		5/16	1.845(46.86)	.783(19.89)	.740(18.80)	
MS20659-116		3/8	1.845(46.86)	.783(19.89)	.740(18.80)	
MS20659-150		7/16	1.980(50.29)	.882(22.40)	.839(21.31)	
MS20659-134		1/2	1.980(50.29)	.882(22.40)	.839(21.31)	
MS20659-117	0	1/4	2.045(51.94)	.853(21.67)	.839(21.31)	.578(14.68) / .558(14.17)
MS20659-151		5/16	2.045(51.94)	.853(21.67)	.839(21.31)	
MS20659-118		3/8	2.045(51.94)	.853(21.67)	.839(21.31)	
MS20659-152		7/16	2.092(53.14)	.903(22.94)	.860(21.84)	
MS20659-135		1/2	2.092(53.14)	.903(22.94)	.860(21.84)	
MS20659-153	00	1/4	2.320(58.93)	.956(24.28)	.913(23.19)	.640(16.26) / .620(15.75)
MS20659-119		5/16	2.320(58.93)	.956(24.28)	.913(23.19)	
MS20659-120		3/8	2.320(58.93)	.956(24.28)	.913(23.19)	
MS20659-154		7/16	2.320(58.93)	.956(24.28)	.913(23.19)	
MS20659-136		1/2	2.320(58.93)	.956(24.28)	.913(23.19)	
MS20659-155	000	5/16	2.455(62.36)	1.053(26.75)	1.010(25.65)	.714(18.14) / .690(17.53)
MS20659-121		3/8	2.455(62.36)	1.053(26.75)	1.010(25.65)	
MS20659-156		7/16	2.455(62.36)	1.053(26.75)	1.010(25.65)	
MS20659-122		1/2	2.455(62.36)	1.053(26.75)	1.010(25.65)	
MS20659-157	0000	5/16	2.755(69.98)	1.148(29.16)	1.095(27.81)	.784(19.81) / .760(19.30)
MS20659-123		3/8	2.755(69.98)	1.148(29.16)	1.095(27.81)	
MS20659-158		7/16	2.755(69.98)	1.148(29.16)	1.095(27.81)	
MS20659-124		1/2	2.755(69.98)	1.148(29.16)	1.095(27.81)	
MS20659-159		5/8	2.755(69.98)	1.148(29.16)	1.095(27.81)	
MS20659-160		3/4	2.955(75.06)	1.268(32.21)	1.200(30.48)	
MS20659-137		7/8	2.971(75.46)	1.268(32.21)	1.200(30.48)	

Downloaded from http://www.everyspec.com

TERMINAL, LUG, UNINSULATED, RECTANGULAR TONGUE, CRIMP STYLE, COPPER, TYPE I, CLASS 1

MS21003

(APPLICABLE SPECIFICATION: MIL-T-7928)

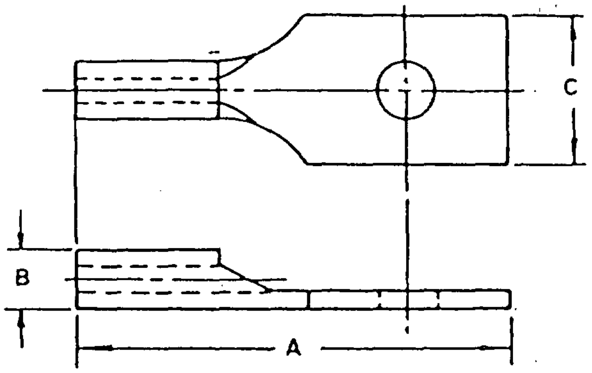

Part number	Wire size	Stud size	A max	B	C max	C min
MS21003-1	22-18	4	.780(19.81)	.165(4.19) .110(2.79)	.228(5.79)	.208(5.28)
MS21003-2		5	.841(21.36)		.244(5.69)	.244(5.69)
MS21003-3		6	.904(22.36)		.260(6.60)	.240(6.10)
MS21003-4		6	.966(24.54)		.322(8.18)	.302(7.67)
MS21003-5		8	1.029(26.14)		.322(8.18)	.302(7.67)
MS21003-6		10	1.029(26.14)		.322(8.18)	.302(7.67)
MS21003-7		12	1.186(30.12)		.385(9.78)	.365(9.27)
MS21003-8		12	1.186(30.12)		.447(11.35)	.427(10.85)
MS21003-9		12	1.186(30.12)		.478(12.14)	.458(11.63)
MS21003-10		8	1.498(38.05)		.385(9.78)	.365(9.27)
MS21003-11	16-14	4	.842(21.39)	.192(4.88) .139(3.53)	.228(5.79)	.208(5.28)
MS21003-12		5	.904(22.96)		.244(6.20)	.224(5.69)
MS21003-13		6	.967(24.56)		.260(6.60)	.240(6.10)
MS21003-14		6	1.029(26.14)		.322(8.18)	.302(7.67)
MS21003-15		8	1.029(27.74)		.322(8.18)	.302(7.67)
MS21003-16		10	1.092(27.74)		.322(8.18)	.302(7.67)
MS21003-17		12	1.249(31.72)		.385(8.18)	.365(9.27)
MS21003-18		12	1.249(31.72)		.447(11.35)	.427(10.85)
MS21003-19		12	1.249(31.72)		.478(12.14)	.458(11.63)
MS21003-20		8	1.560(39.62)		.385(9.78)	.365(9.27)
MS21003-21	12-10	4	.967(24.56)	.255(6.48) .199(5.05)	.228(5.79)	.208(5.28)
MS21003-22		5	1.029(26.14)		.260(6.20)	.224(5.69)
MS21003-23		6	1.092(27.74)		.322(8.18)	.302(7.67)
MS21003-24		6	1.154(29.31)		.322(8.18)	.302(7.67)
MS21003-25		8	1.217(30.91)		.322(8.18)	.302(7.67)
MS21003-26		10	1.217(30.91)		.322(8.18)	.302(7.67)
MS21003-27		12	1.373(34.87)		.385(9.78)	.365(9.27)
MS21003-28		12	1.373(34.87)		.447(11.35)	.427(10.85)
MS21003-29		12	1.373(34.87)		.478(12.14)	.458(11.63)
MS21003-30		8	1.685(42.80)		.385(9.78)	.365(9.27)
MS21003-31	22-18	2	.780(19.81)	.165(4.19) .110(2.79)	.187(4.75)	.177(4.50)

Downloaded from http://www.everyspec.com

TERMINAL, LUG, UNINSULATED, FLAG TONGUE,
CRIMP STYLE, COPPER, TYPE I, CLASS 1

MS21006

(APPLICABLE SPECIFICATION: MIL-T-7928)

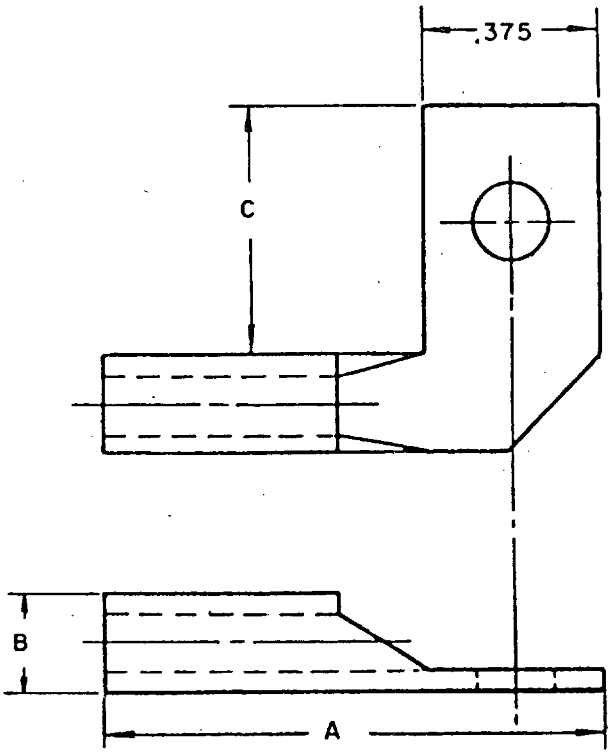

Part number	Wire size	Stud size	A max	B	C
MS21006-1	22-18	8	.884(22.45)	.165(4.19) / .110(2.79)	.500 (12.70)
MS21006-2	16-14	8	.947(24.05)	.192(4.88) / .139(3.53)	
MS21006-3	12-10	8	1.072(27.23)	.255(6.48) / .199(5.05)	

Downloaded from http://www.everyspec.com

TERMINAL, LUG, UNINSULATED, RECTANGULAR (BENT 90°),
CRIMP STYLE, COPPER, TYPE I, CLASS 1 (SPECIAL APPLICATIONS)

MS21007

(APPLICABLE SPECIFICATIONS: MIL-T-7928

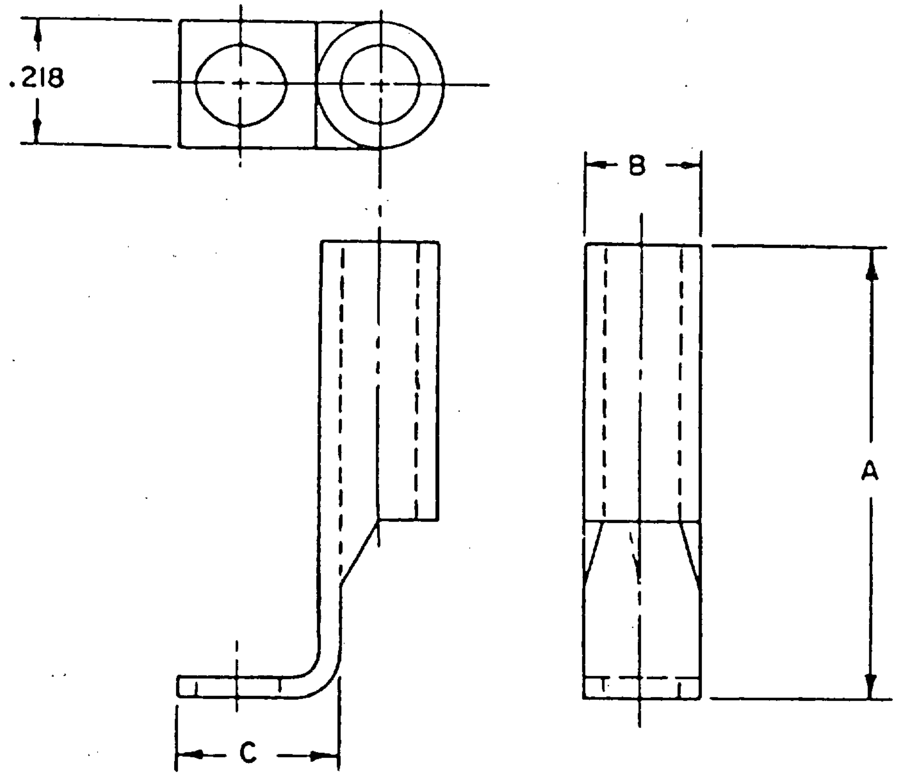

Part number	Wire size	Stud size	A max	B	C
MS21007-1	22-18	Special	.670(17.02)	.165(4.19) / .110(2.79)	.250(6.35)
MS21007-2	16-14		.687(17.45)	.192(4.88) / .139(3.53)	.250(6.35)
MS21007-3	12-10		.812(20.62)	.255(6.48) / .199(5.05)	.250(6.35)

Downloaded from http://www.everyspec.com

TERMINAL, LUG, UNINSUALTED, OFFSET RECTANGULAR TONGUE, CRIMP STYLE, COPPER, TYPE I, CLASS 1

MS21008

(APPLICABLE SPECIFICATIONS: MIL-T-7928)

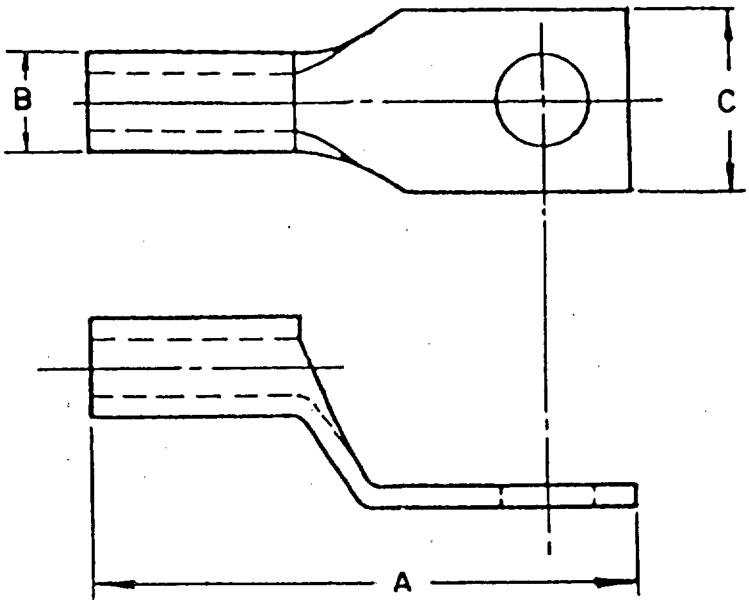

Part number	Wire size	Stud size	A max	B	C	
					max	min
MS21008-1 MS21008-2	22-18	8	.873(22.17) .936(23.77)	.165(4.19) .110(2.79)	.322(8.18)	.302(7.67)
MS21008-3 MS21008-4	16-14	8	.936(23.77) .999(25.37)	.192(4.88) .139(3.53)	.322(8.18)	.302(7.67)
MS21008-5 MS21008-6	12-10	8	1.061(26.95) 1.124(28.55)	.255(6.48) .199(5.05)	.322(8.18)	.302(7.67)

Downloaded from http://www.everyspec.com

TERMINAL, LUG, UNINSULATED, RECTANGULAR TONGUE,
LIPPED SIDE, CRIMP STYLE, COPPER, TYPE I, CLASS 1

MS21009

(APPLICABLE SPECIFICATION: MIL-T-7928)

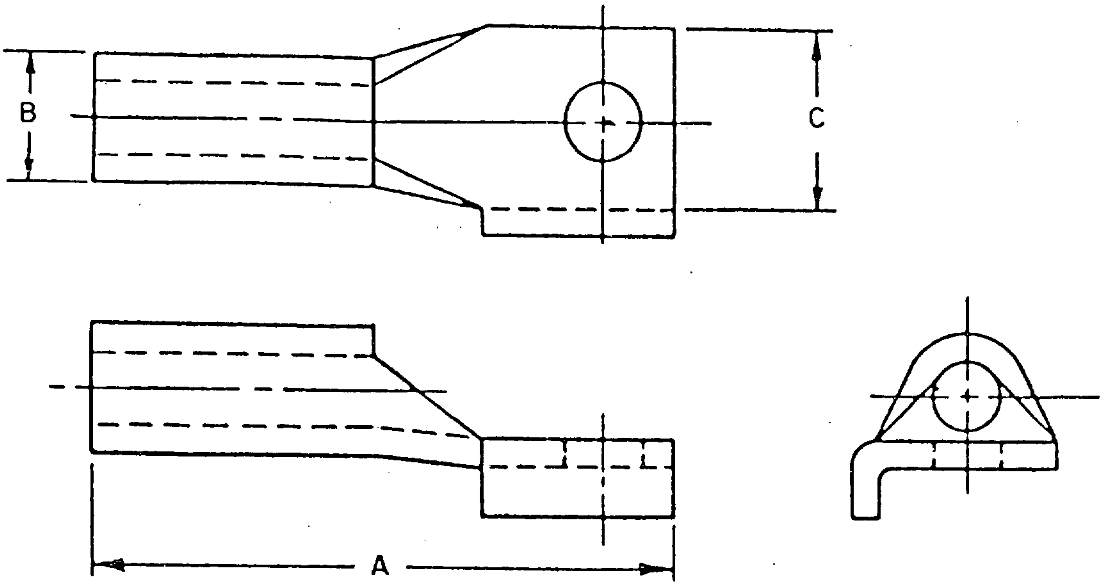

Part number	Wire size	Stud size	A max	B	C max	C min
MS21009-1	22-18	6	.873(22.17)	.165(4.19) / .110(2.79)	.322(8.18)	.302(7.67)
MS21009-2	16-14	6	.936(23.77)	.192(4.88) / .139(3.53)	.322(8.18)	.302(7.67)
MS21009-3	12-10	6	1.061(26.95)	.255(6.48) / .199(5.05)	.322(8.18)	.302(7.67)

Downloaded from http://www.everyspec.com

TERMINAL, LUG, UNINSULATED, RECTANGULAR TONGUE,
LIPPED END, REINFORCED BOSS CRIMP STYLE, TYPE I, CLASS 1

MS21010

(APPLICABLE SPECIFICATION: MIL-T-7928)

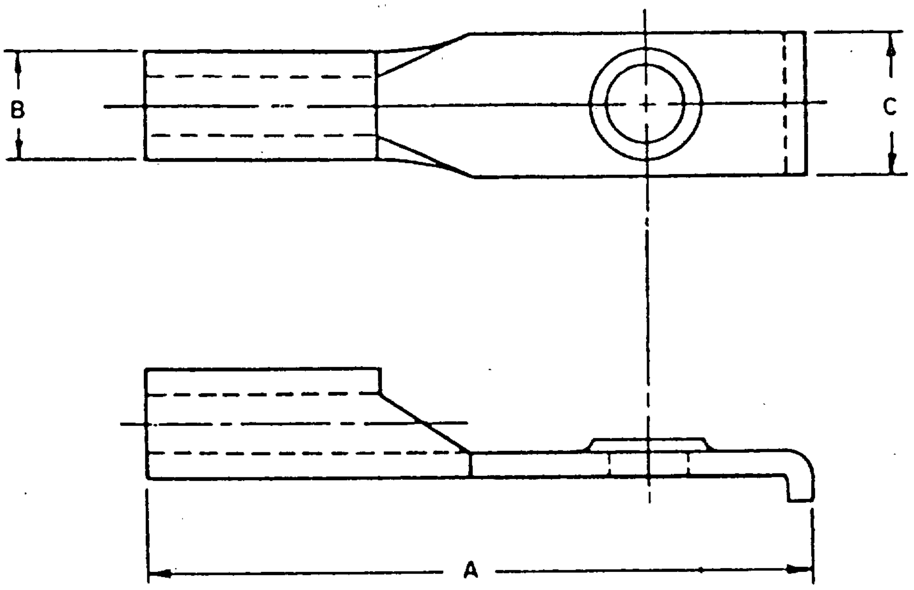

Part number	Wire size	Stud size	A max	B	C max	C min
MS21010-1	22-18	8	1.248(31.70)	.165(4.19) / .110(2.79)	.322(8.18)	.302(7.67)
MS21010-2	16-14	8	1.311(33.30)	.192(4.88) / .139(3.53)	.322(8.18)	.302(7.67)
MS21010-3	12-10	8	1.436(36.47)	.255(6.48) / .199(5.05)	.322(8.18)	.302(7.67)

Downloaded from http://www.everyspec.com

TERMINAL, LUG, UNINSULATED, RECTANGULAR TONGUE, REINFORCED BOSS, POSITIONING SLOT, CRIMP STYLE, COPPER, TYPE I, CLASS 1

MS21011

(APPLICABLE SPECIFICATION: MIL-T-7928

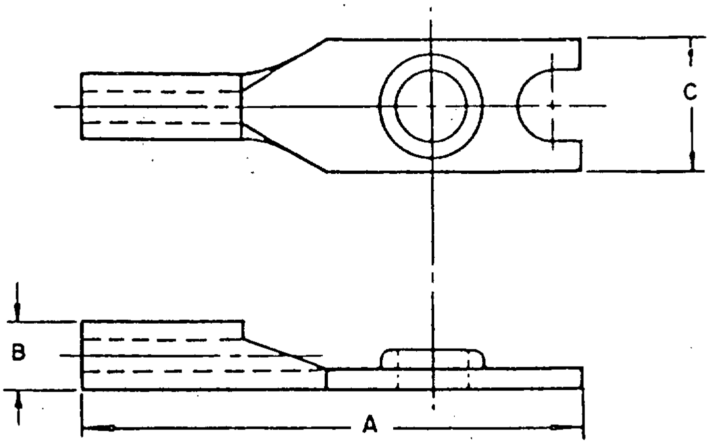

Part number	Wire size	Stud size	A max	B	C max	C min
MS21011-1 MS21011-2	22-18	6 8	.967(24.56) 1.123(28.52)	.165(4.19) .110(2.79)	.260(5.60) .322(8.18)	.240(6.10) .302(7.67)
MS21011-3 MS21011-4	16-14	6 8	1.030(26.16) 1.186(30.12)	.192(4.88) .139(3.53)	.260(6.60) .322(8.18)	.240(6.10) .302(7.67)
MS21011-5 MS21011-6	12-10	6 8	1.155(29.34) 1.311(33.30)	.255(6.48) .199(5.05)	.260(6.60) .322(8.18)	.240(6.10) .302(7.67)

Downloaded from http://www.everyspec.com

TERMINAL, LUG, UNINSULATED, RECTANGULAR TONGUE, LIPPED END, CRIMP STYLE, COPPER, TYPE I, CLASS 1

MS21012

(APPLICABLE SPECIFICATION: MIL-T-7928)

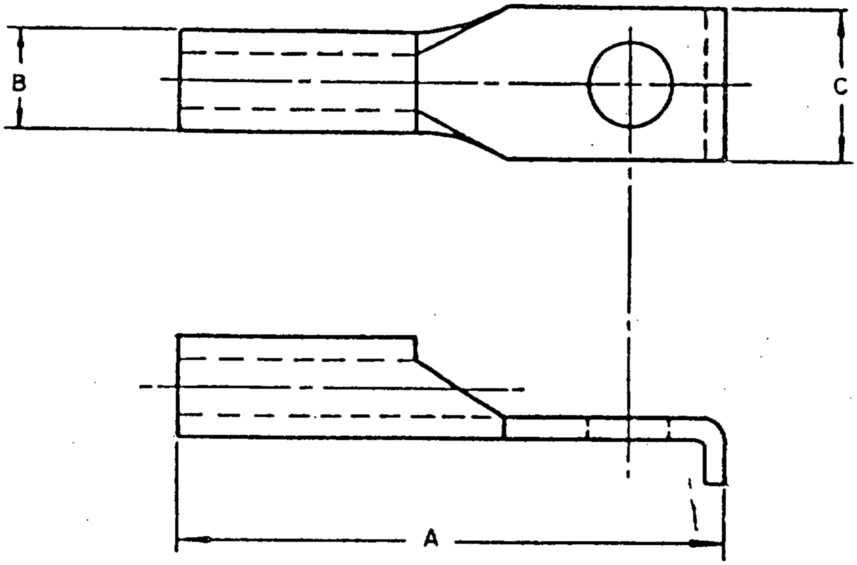

Part number	Wire size	Stud size	A max	B	C max	C min
MS21012-1	22-18	8	.998(25.35)	.165(4.19) / .110(2.79)	.322(8.18)	.302(7.67)
MS21012-2	16-14	8	1.061(26.95)	.192(4.88) / .139(3.53)	.322(8.18)	.302(7.67)
MS21012-3	12-10	8	1.186(30.12)	.255(6.48) / .199(5.05)	.322(8.18)	.302(7.67)

Downloaded from http://www.everyspec.com

TERMINAL, LUG, UNINSULATED, RECTANGULAR TONGUE, OFF-CENTER HOLE, LIPPED END, CRIMP STYLE, COPPER, TYPE I, CLASS 1

MS21013

(APPLICABLE SPECIFICATION: MIL-T-7928)

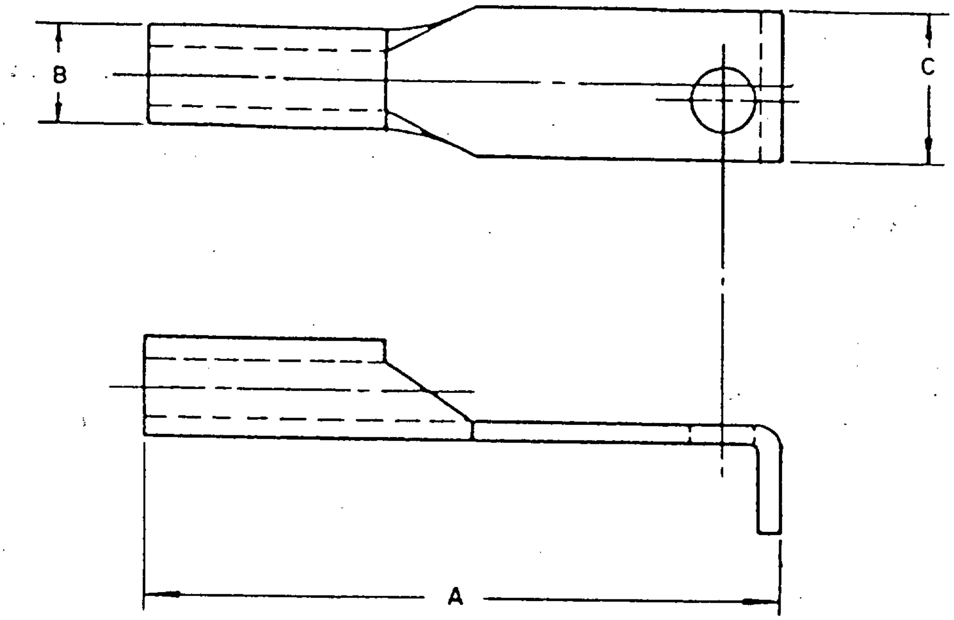

Part number	Wire size	Stud size	A max	B	C max	C min
MS21013-1	22-18	6	1.186(30.12)	.165(4.19) / .110(2.79)	.322(8.18)	.302(7.64)
MS21013-2	16-14	6	1.249(31.72)	.192(4.88) / .139(3.53)	.322(8.18)	.302(7.64)
MS21013-3	12-10	6	1.374(34.90)	.255(6.48) / .199(5.05)	.322(8.18)	.302(7.64)

Downloaded from http://www.everyspec.com

TERMINAL, LUG, UNINSULATED, RECTANGULAR TONGUE, TWO-BARREL, CRIMP STYLE, COPPER, TYPE I, CLASS 1

MS21014

(APPLICABLE SPECIFICATION: MIL-T-7928)

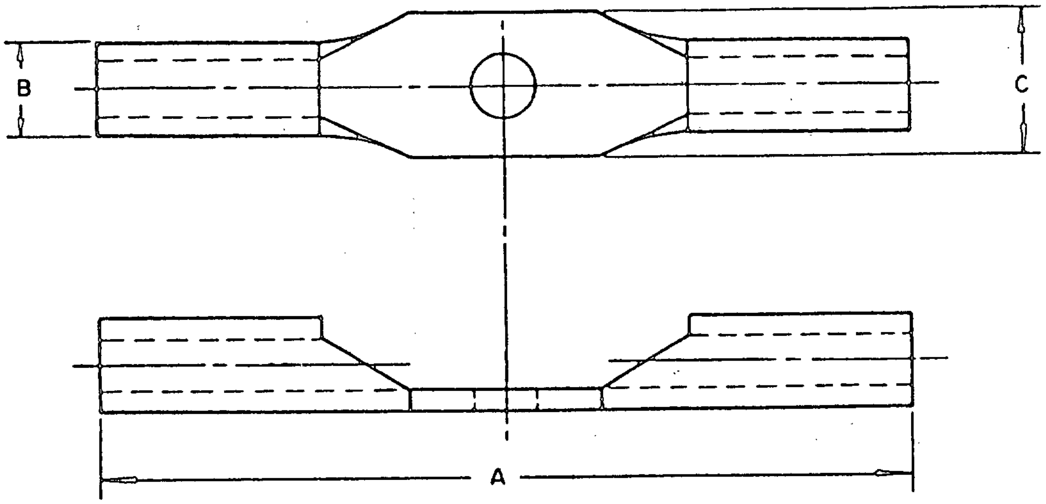

Part number	Wire size	Stud size	A max	B	C max	C min
MS21014-1	22-18	6	1.466(37.24)	.165(4.19) / .110(2.79)	.322(8.18)	.302(7.67)
MS21014-2	16-14	6	1.592(40.44)	.192(4.88) / .139(3.53)	.322 8.18)	.302(7.67)
MS21014-3	12-10	6	1.842(46.79)	.255(6.48) / .199(5.05)	.322(8.18)	.302(7.67)

Downloaded from http://www.everyspec.com

TERMINAL LUG, UNINSULATED, SQUARE TONGUE,
LIPPED END, RECTANGULAR STUD HOLE, CRIMP STYLE
COPPER, TYPE I, CLASS 1

MS21015

(APPLICABLE SPECIFICATION: MIL-T-7928)

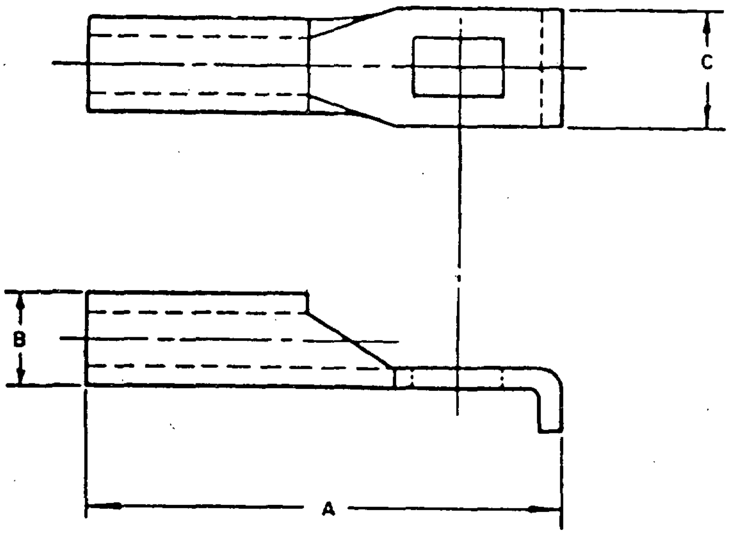

Part number	Wire size	Stud size	A max	B	C max	C min
MS21015-1	22-18	.130 X .200 (3.30X5.08)	.905(22.99)	.165(4.19) / .110(2.79)	.260(6.60)	.240(6.10)
MS21015-2	16-14	.130 X .200 (3.30X5.08)	.968(24.59)	.192(4.88) / .139(3.53)	.260(6.60)	.240(6.10)
MS21015-3	12-10	.130 X .200 (3.30X5.08)	1.093(27.76)	.255(6.48) / .199(5.05)	.260(6.60)	.240(6.10)

Downloaded from http://www.everyspec.com

TERMINAL, LUG, CRIMP STYLE, COPPER, INSULATED,
RING TONGUE, BELL-MOUTHED, TYPE II, CLASS 1
FOR 105°C TOTAL CONDUCTOR TEMPERATURE

MS25036
(APPLICABLE SPECIFICATION: MIL-T-7928)

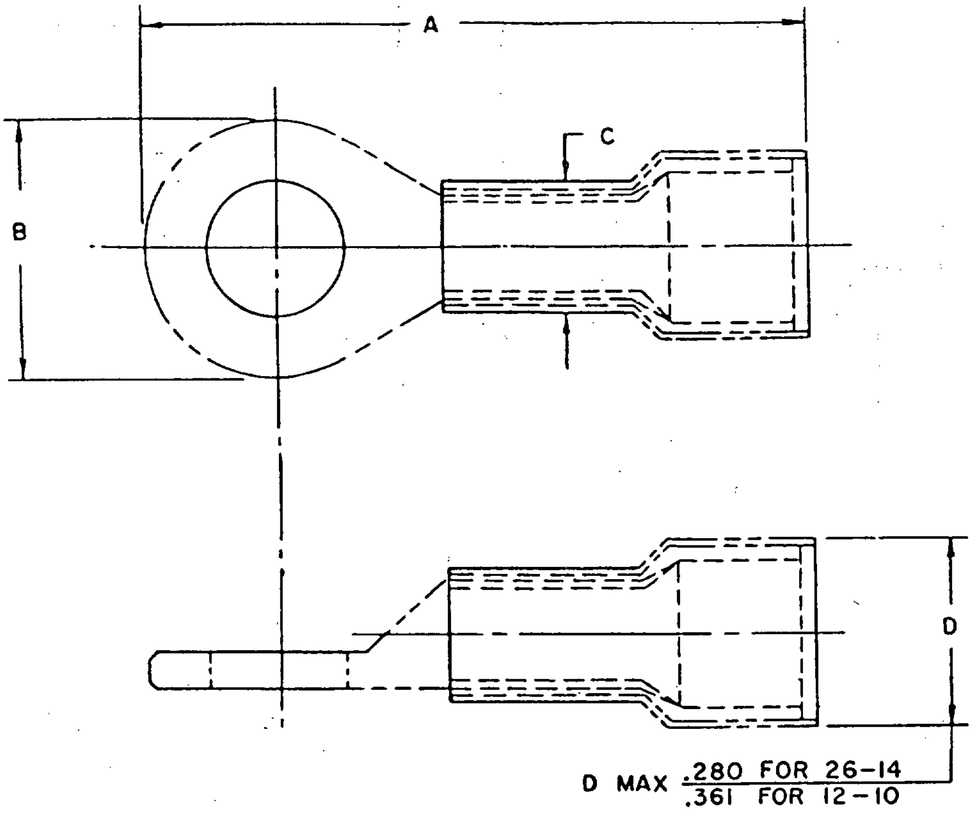

Downloaded from http://www.everyspec.com

Part number	Terminal size	Stud size	A max	B max	B min	C dia
MS25036-143	26-24	2	.690(17.53)	.210(5.33)	.133(3.39)	.215(5.46) / .190(4.83)
MS25036-144		4	.755(19.18)	.260(6.60)	.193(4.90)	
MS25036-145		6	.855(21.72)	.260(6.60)	.245(6.22)	
MS25036-146		8	.855(21.72)	.330(8.38)	.245(6.22)	
MS25036-147		10	.855(21.72)	.330(8.38)	.245(6.22)	
MS25036-159	22-18	2	.755(19.18)	.230(5.84)	.198(5.03)	.215(5.46) / .190(4.83)
MS25036-148		4	.755(19.18)	.230(5.84)	.210(5.33)	
MS25036-101		6	.755(19.18)	.230(5.84)	.210(5.33)	
MS25036-102		6	.865(21.97)	.260(6.60)	.245(6.22)	
MS25036-149		8	.910(23.11)	.320(8.13)	.305(7.75)	
MS25036-103		10	.910(23.11)	.320(8.13)	.305(7.75)	
MS25036-150		.250	1.090(27.69)	.473(12.01)	.450(11.43)	
MS25036-104		.312	1.090(27.69)	.473(12.01)	.450(11.43)	
MS25036-105		.375	1.320(33.53)	.540(13.72)	.520(13.21)	
MS25036-151		.500	1.320(33.53)	.720(18.29)	.705(17.91)	
MS25036-152	16-24	4	.774(19.66)	.260(6.60)	.240(6.10)	.240(6.10) / .210(5.33)
MS25036-106		6	.774(19.66)	.260(6.60)	.240(6.10)	
MS25036-107		6	.910(23.11)	.317(8.05)	.302(7.67)	
MS25036-153		8	.910(23.11)	.317(8.05)	.302(7.67)	
MS25036-108		10	.915(23.24)	.317(8.05)	.302(7.67)	
MS25036-154		.250	1.085(27.56)	.473(12.01)	.450(11.43)	
MS25036-109		.312	1.085(27.56)	.473(12.01)	.450(11.43)	
MS25036-110		.375	1.225(31.12)	.540(13.72)	.520(13.21)	
MS25036-155		.500	1.320(33.53)	.720(18.29)	.705(17.91)	
MS25036-111	12-10	6	1.120(28.45)	.380(9.65)	.365(9.27)	.300(7.62) / .275(6.99)
MS25036-156		8	1.120(28.45)	.380(9.65)	.365(9.27)	
MS25036-112		10	1.120(28.45)	.380(9.65)	.365(9.27)	
MS25036-157		.250	1.322(33.58)	.536(13.61)	.516(13.11)	
MS25036-113		.312	1.322(33.58)	.536(13.61)	.516(13.11)	
MS25036-114		.375	1.414(35.92)	.598(15.19)	.573(14.55)	
MS25036-158		.500	1.414(35.92)	.720(18.29)	.705(17.91)	
MS25036-115	8	10	1.402(35.61)	.429(10.90)	.385(9.80)	.350(8.89) / .300(7.62)
MS25036-116		.250	1.466(37.24)	.478(12.14)	.435(11.05)	
MS25036-117		.312	1.544(39.22)	.590(14.99)	.547(13.89)	
MS25036-118		.375	1.544(39.22)	.590(14.99)	.547(13.89)	
MS25036-119	6	10	1.559(39.60)	.503(12.78)	.460(11.68)	.410(10.41) / .360(9.14)
MS25036-120		.250	1.559(39.60)	.503(12.78)	.460(11.68)	
MS25036-121		.312	1.762(44.75)	.623(15.82)	.580(14.73)	
MS25036-122		.375	1.762(44.75)	.623(15.82)	.580(14.73)	
MS25036-123	4	.250	1.812(46.02	.565(14.35)	.522(13.26)	.500(12.70) / .425(10.80)
MS25036-124		.312	1.879(47.73)	.648(16.46)	.605(15.37)	
MS25036-125		.375	1.879(47.73)	.648(16.46)	.605(15.37)	

Downloaded from http://www.everyspec.com

Part number	Terminal size	Stud size	A max	B max	B min	C dia
MS25036-126 MS25036-127 MS25036-128	2	.250 .375 .500	2.069(52.55) 2.069(52.55) 2.269(57.63)	.711(18.06) .711(18.06) .804(20.42)	.668(16.97) .668(16.97) .761(19.33)	.560(14.22) .510(12.95)
MS25036-129 MS25036-130 MS25036-131	1	.250 .375 .500	2.150(54.61) 2.150(54.61) 2.370(60.20)	.804(20.42) .804(20.42) .804(20.42)	.761(19.33) .761(19.33) .761(19.33)	.620(15.75) .560(14.22)
MS25036-132 MS25036-133 MS25036-134	0	.250 .375 .500	2.401(60.99) 2.401(60.99) 2.525(64.14)	.853(21.67) .853(21.67) .903(22.94)	.810(20.57) .810(20.57) .860(21.84)	.685(17.40) .625(15.88)
MS25036-135 MS25036-136 MS25036-137	00	.312 .375 .500	2.750(69.85) 2.750(69.85) 2.750(69.85)	.956(24.28) .956(24.28) .956(24.28)	.913(23.19) .913(23.19) .913(23.19)	.755(19.18) .685(17.40)
MS25036-138 MS25036-139	000	.375 .500	3.000(76.20) 3.000(76.20)	1.053(26.75) 1.053(26.75)	1.010(25.65) 1.010(25.65)	.814(20.68) .729(18.52)
MS25036-140 MS25036-141	0000	.375 .500	3.300(83.82) 3.300(83.82)	1.148(29.16) 1.148(29.16)	1.095(27.81) 1.095(27.81)	.885(22.48) .802(20.37)

Downloaded from http://www.everyspec.com

TERMINAL, LUG, FLAG TYPE, CRIMP STYLE, COPPER, CLASS I

MS25189

(APPLICABLE SPECIFICATION: MIL-T-7928)

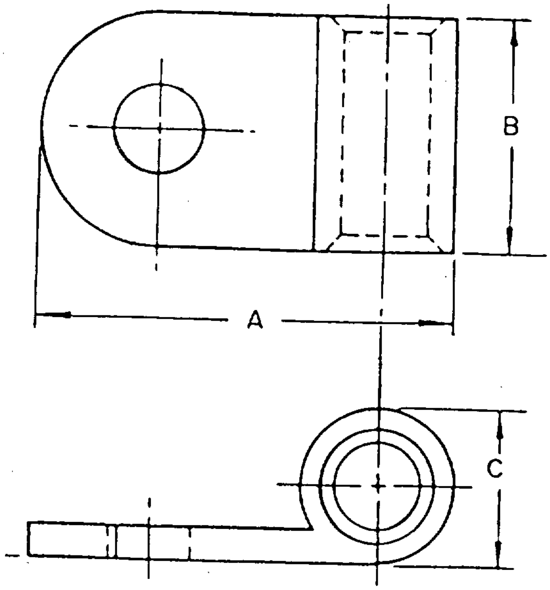

Downloaded from http://www.everyspec.com

Part number	Cable size	Stud size	A max	B min	C min	C max
MS25189-101	8	8	1.064(27.03)	.367(9.32)	.300(7.62)	.330(8.38)
MS25189-102		10	1.064(27.03)			
MS25189-103		1/4	1.064(27.03)			
MS25189-104		5/16	1.125(28.58)			
MS25189-105		3/8	1.390(35.31)			
MS25189-106		1/2	1.390(35.31)			
MS25189-107	6	10	1.118(28.40)	.470(11.94)	.344(8.74)	.377(8.58)
MS25189-108		1/4	1.118(28.40)			
MS25189-109		5/16	1.187(30.15)			
MS25189-110		3/8	1.432(36.37)			
MS25189-111		1/2	1.453(36.91)			
MS25189-112	4	10	1.290(32.77)	.470(11.94)	.433(11.00)	.471(11.96)
MS25189-113		1/4	1.290(32.77)			
MS25189-114		5/16	1.290(32.77)			
MS25189-115		3/8	1.290(32.77)			
MS25189-116		1/2	1.562(39.67)			
MS25189-117	2	10	1.389(35.28)	.600(15.24)	.511(12.98)	.545(13.84)
MS25189-118		1/4	1.389(35.28)			
MS25189-119		5/16	1.389(35.28)			
MS25189-120		3/8	1.389(35.28)			
MS25189-121		7/16	1.562(39.67)			
MS25189-122		1/2	1.593(40.46)			
MS25189-123	1	1/4	1.438(36.53)	.600(15.24)	.566(14.38)	.600(15.24)
MS25189-124		5/16	1.463(37.16)			
MS25189-125		3/8	1.463(37.16)			
MS25189-126		7/16	1.639(41.63)			
MS25189-127		1/2	1.776(45.11)			
MS25189-128	0	1/4	1.733(44.02)	.665(16.89)	.638(16.21)	.672(17.07)
MS25189-129		5/16	1.733(44.02)			
MS25189-130		3/8	1.733(44.02)			
MS25189-131		7/16	1.733(44.02)			
MS25189-132		1/2	1.733(44.02)			
MS25189-133	00	1/4	1.844(46.84)	.780(19.81)	.746(18.95)	.780(19.81)
MS25189-134		5/16				
MS25189-135		3/8				
MS25189-136		7/16				
MS25189-137		1/2				
MS25189-138	000	5/16	2.000(50.80)	.805(20.45)	.800(20.32)	.834(21.18)
MS25189-139		3/8				
MS25189-140		7/16				
MS25189-141		1/2				
MS25189-142	0000	5/16	2.127(54.03)	.984(24.99)	.866(22.00)	.906(23.01)
MS25189-143		3/8	2.127(54.03)			
MS25189-144		7/16	2.127(54.03)			
MS25189-145		1/2	2.127(54.03)			
MS25189-146		5/8	2.127(54.03)			
MS25189-147		7/8	3.500(83.90)			

Downloaded from http://www.everyspec.com

TERMINALS, LUG AND SPLICES, CONDUCTOR, CRIMP STYLE, COPPER
TERMINAL, LUG, CRIMP STYLE, COPPER, INSULATED, RING TONGUE,
FOR THIN WALL WIRE, TYPE II CLASS 1
FOR 105° C TOTAL CONDUCTOR TEMPERATURE

(Applicable Specification: MIL-T-7928/1)

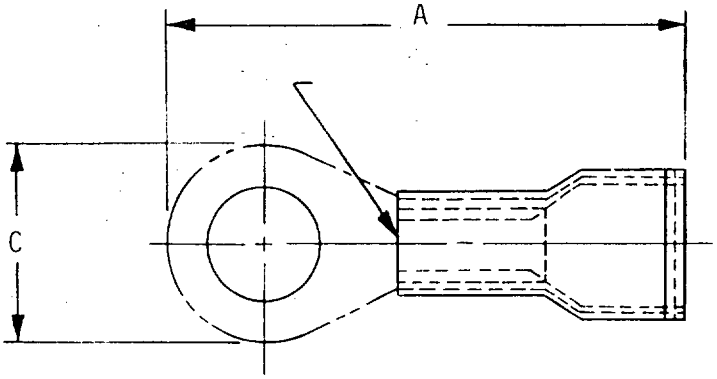

DRAWING A

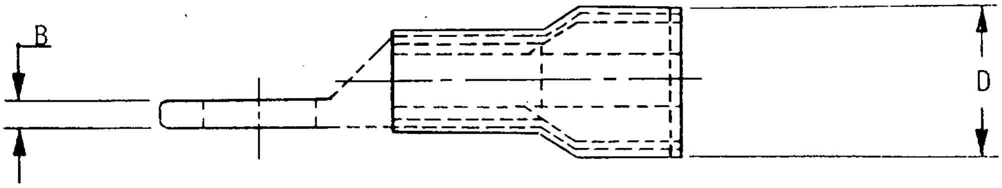

Downloaded from http://www.everyspec.com

PART NUMBER	TERMINAL SIZE	STUD SIZE	A MAX	B MAX	C MAX	D MAX
M7928/1- 1	26	.086	.740(18.79)	.028(0.71)	.210(5.33)	.280(7.11)
M7928/1- 2	26	.112	.786(19.95)	.028(0.71)	.260(6.60)	.280(7.11)
M7928/1- 3	26	.138	.886(22.50)	.028(0.71)	.260(6.60)	.280(7.11)
M7928/1- 4	26	.164	.886(22.50)	.028(0.71)	.330(8.38)	.280(7.11)
M7928/1- 5	26	.190	.886(22.50)	.028(0.71)	.330(8.38)	.280(7.11)
M7928/1- 6	24	.086	.740(18.79)	.028(0.71)	.210(5.33)	.280(7.11)
M7928/1- 7	24	.112	.786(19.96)	.028(0.71)	.260(6.60)	.280(7.11)
M7928/1- 8	24	.138	.886(22.50)	.028(0.71)	.260(6.60)	.280(7.11)
M7928/1- 9	24	.164	.886(22.50)	.028(0.71)	.330(8.38)	.280(7.11)
M7928/1-10	24	.190	.886(22.50)	.028(0.71)	.330(8.38)	.280(7.11)
M7928/1-11	22	.112	.801(20.34)	.037(0.94)	.230(5.84)	.280(7.11)
M7928/1-12	22	.138	.801(20.34)	.037(0.94)	.230(5.84)	.280(7.11)
M7928/1-13	22	.138	.911(23.14)	.037(0.94)	.260(6.60)	.280(7.11)
M7928/1-14	22	.164	.956(24.28)	.037(0.94)	.320(8.13)	.280(7.11)
M7928/1-15	22	.190	.956(24.28)	.037(0.94)	.320(8.13)	.280(7.11)
M7928/1-16	22	.250	1.136(28.85)	.037(0.94)	.437(11.10)	.280(7.11)
M7928/1-17	22	.312	1.136(28.85)	.037(0.94)	.437(11.10)	.280(7.11)
M7928/1-18	22	.375	1.366(34.70)	.037(0.94)	.540(13.72)	.280(7.11)
M7928/1-19	20	.500	1.355(34.70)	.037(0.94)	.720(18.29)	.280(7.11)
M7928/1-20	20	.112	.801(20.34)	.037(0.94)	.230(5.84)	.280(7.11)
M7928/1-21	20	.138	.801(20.34)	.037(0.94)	.230(5.84)	.280(7.11)
M7928/1-22	20	.138	.911(23.14)	.037(0.94)	.260(6.60)	.280(7.11)
M7928/1-23	20	.164	.956(24.28)	.037(0.94)	.320(8.13)	.280(7.11)
M7928/1-24	20	.190	.956(24.28)	.037(0.94)	.320(8.13)	.280(7.11)
M7928/1-25	20	.250	1.136(28.85)	.037(0.94)	.473(12.01)	.280(7.11)
M7928/1-26	20	.312	1.136(28.85)	.037(0.94)	.473(12.01)	.280(7.11)
M7928/1-27	20	.375	1.366(34.70)	.037(0.94)	.540(13.72)	.280(7.11)
M7928/1-28	18	.500	1.366(34.70)	.037(0.94)	.720(18.29)	.280(7.11)
M7928/1-29	18	.122	.801(20.34)	.037(0.94)	.230(5.84)	.280(7.11)
M7928/1-30	18	.138	.801(20.34)	.037(0.94)	.230(5.84)	.280(7.11)
M7928/1-31	18	.138	.911(23.14)	.037(0.94)	.260(6.60)	.280(7.11)
M7928/1-32	18	.164	.956(24.28)	.037(0.94)	.320(8.13)	.280(7.11)
M7928/1-33	18	.910	.956(24.28)	.037(0.94)	.320(8.13)	.280(7.11)
M7928/1-34	18	.250	1.136(28.85)	.037(0.94)	.473(12.01)	.280(7.11)
M7928/1-35	18	.312	1.136(28.85)	.037(0.94)	.473(12.01)	.280(7.11)
M7928/1-36	18	.375	1.366(34.70)	.037(0.94)	.540(13.72)	.280(7.11)
M7928/1-37	16	.500	1.366(34.70)	.037(0.94)	.720(18.29)	.280(7.11)
M7928/1-38	16	.112	.820(20.83)	.037(0.94)	.260(6.60)	.280(7.11)
M7928/1-39	16	.138	.820(20.83)	.037(0.94)	.260(6.60)	.280(7.11)
M7928/1-40	16	.138	.956(24.28)	.037(0.94)	.317(8.05)	.280(7.11)
M7928/1-41	16	.164	.956(24.28)	.037(0.94)	.317(8.05)	.280(7.11)
M7928/1-42	16	.190	.961(24.41)	.037(0.94)	.317(8.05)	.280(7.11)
M7928/1-43	16	.250	1.131(28.73)	.037(0.94)	.473(12.01)	.280(7.11)
M7928/1-44	16	.312	1.131(28.73)	.037(0.94)	.473(12.01)	.280(7.11)
M7928/1-45	16	.375	1.271(32.28)	.037(0.94)	.540(13.72)	.280(7.11)
M7928/1-46	14	.500	1.366(34.70)	.037(0.94)	.720(18.29)	.280(7.11)
M7928/1-47	14	.112	.820(20.83)	.037(0.94)	.260(6.60)	.280(7.11)

Downloaded from http://www.everyspec.com

PART NUMBER	TERMINAL SIZE	STUD SIZE	A MAX	B MAX	C MAX	D MAX
M7928/1-48	14	.138	.820(20.83)	.037(0.94)	.260(6.60)	.280(7.11)
M7928/1-49	14	.138	.956(24.28)	.037(0.94)	.317(8.05)	.280(7.11)
M7928/1-50	14	.164	.956(24.28)	.037(0.94)	.317(8.05)	.280(7.11)
M7928/1-51	14	.190	.961(24.41)	.037(0.94)	.317(8.05)	.280(7.11)
M7928/1-52	14	.250	1.131(28.73)	.037(0.94)	.473(12.01)	.280(7.11)
M7928/1-53	14	.312	1.131)28.73)	.037(0.94)	.473(12.01)	.280(7.11)
M7928/1-54	14	.375	1.271(32.28)	.037(0.94)	.540(13.72)	.280(7.11)
M7928/1-55	14	.500	1.366(34.70)	.037(0.94)	.720(18.29)	.280(7.11)
M7928/1-56	12	.138	1.198(30.43)	.043(1.09)	.380(9.65)	.361(9.17)
M7928/1-57	12	.164	1.198(30.43)	.043(1.09)	.380(9.65)	.361(9.17)
M7928/1-58	12	.190	1.198(30.43)	.043(1.09)	.380(9.65)	.361(9.17)
M7928/1-59	12	.250	1.400(35.56)	.043(1.09)	.536(13.61)	.361(9.17)
M7928/1-60	12	.312	1.400(35.56)	.043(1.09)	.536(13.61)	.361(9.17)
M7928/1-61	12	.375	1.492(37.90)	.043(1.09)	.598(15.19)	.361(9.17)
M7928/1-62	12	.500	1.492(37.90)	.043(1.09)	.720(18.29)	.361(9.17)
M7928/1-63	10	.138	1.198(30.43)	.043(1.09)	.380(9.65)	.361(9.17)
M7928/1-64	10	.164	1.198(30.43)	.043(1.09)	.380(9.65)	.361(9.17)
M7928/1-65	10	.190	1.198(30.43)	.043(1.09)	.380(9.65)	.361(9.17)
M7928/1-66	10	.250	1.400(35.56)	.043(1.09)	.536(13.61)	.361(9.17)
M7928/1-67	10	.312	1.400(35.56)	.043(1.09)	.536(13.61)	.361(9.17)
M7928/1-68	10	.375	1.492(37.90)	.043(1.09)	.598(15.19)	.361(9.17)
M7928/1-69	10	.500	1.492(37.90)	.043(1.09)	.720(18.29)	.361(9.17)
M7928/1-70	22	.086	.790(20.06)	.037(0.94)	.230(5.84)	.280(7.11)
M7928/1-71	20	.086	.790(20.06)	.037(0.94)	.230(5.84)	.280(7.11)
M7928/1-72	18	.086	.790)20.06)	.037(0.94)	.230) 5.84)	.280(7.11)

Downloaded from http://www.everyspec.com

TERMINALS, LUG AND SPLICES, CONDUCTOR, CRIMP STYLE, COPPER, INSULATED, RECTANGULAR TONGUE, FOR THIN WALL WIRE, TYPE II CLASS 1 FOR 105° TOTAL CONDUCTOR TEMPERATURE

(Applicable Specification: MIL-T-7928/2)

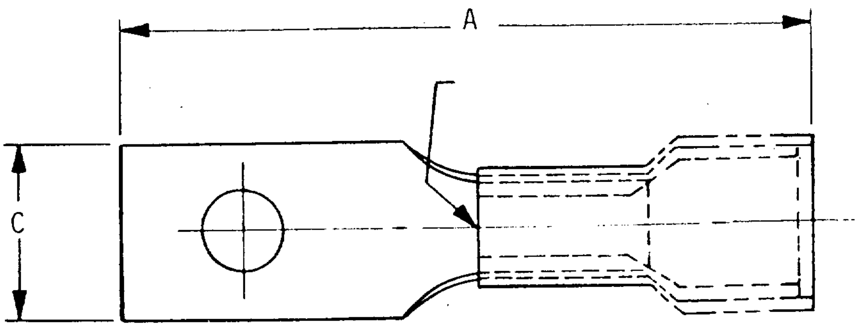

DRAWING A

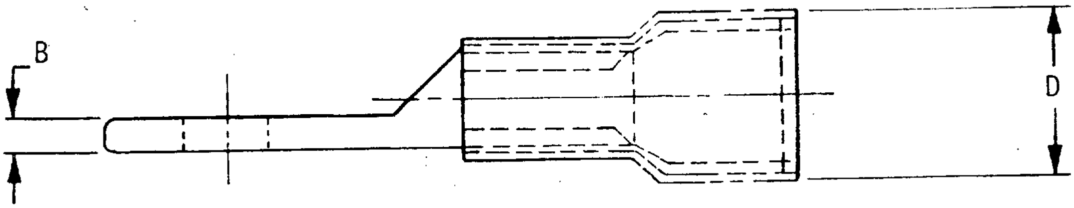

Downloaded from http://www.everyspec.com

PART NUMBER	WIRE SIZE	STUD SIZE	A MAX	B	C	D MAX
M7928/2- 1	22	.112	.842(21.39)	.037(0.94)	.237(6.02)	.280(7.11)
M7928/2- 2	22	.112	1.061(26.95)	.037(0.94)	.237(6.02)	.280(7.11)
M7928/2- 3	22	.125	.905(22.99)	.037(0.94)	.277(7.03)	.280(7.11)
M7928/2- 4	22	.138	1.061(26.95)	.037(0.94)	.237(6.02)	.280(7.11)
M7928/2- 5	22	.138	1.155(29.34)	.037(0.94)	.302(7.67)	.280(7.11)
M7928/2- 6	22	.164	1.155(29.34)	.037(0.94)	.302(7.67)	.280(7.11)
M7928/2- 7	22	.164	1.405(35.69)	.037(0.94)	.390(9.91)	.280(7.11)
M7928/2- 8	20	.112	.842(21.39)	.037(0.94)	.237(6.02)	.280(7.11)
M7928/2- 9	20	.112	1.061(26.95)	.037(0.94)	.237(6.02)	.280(7.11)
M7928/2-10	20	.125	.905(22.99)	.037(0.94)	.277(7.03)	.280(7.11)
M7928/2-11	20	.138	1.061(26.95)	.037(0.94)	.237(6.02)	.280(7.11)
M7928/2-12	20	.138	1.155(29.34)	.037(0.94)	.302(7.67)	.280(7.11)
M7928/2-13	20	.164	1.155(29.34)	.037(0.94)	.302(7.67)	.280(7.11)
M7928/2-14	20	.164	1.405(35.69)	.037(0.94)	.390(9.91)	.280(7.11)
M7928/2-15	18	.112	.842(21.39)	.037(0.94)	.237(6.02)	.280(7.11)
M7928/2-16	18	.112	1.061(26.95)	.037(0.94)	.237(6.02)	.280(7.11)
M7928/2-17	18	.125	.905(22.99)	.037(0.94)	.277(7.03)	.280(7.11)
M7928/2-18	18	.138	1.061(26.95)	.037(0.94)	.237(6.02)	.280(7.11)
M7928/2-19	18	.138	1.155(29.34)	.038(0.94)	.302(7.67)	.280(7.11)
M7928/2-20	18	.164	1.155(29.34)	.037(0.94)	.302(7.67)	.280(7.11)
M7928/2-21	18	.164	1.405(35.69)	.037(0.94)	.390(9.91)	.280(7.11)
M7928/2-22	16	.112	.842(21.39)	.037(0.94)	.237(6.02)	.280(7.11)
M7928/2-23	16	.112	1.061(26.95)	.037(0.94)	.237(6.02)	.280(7.11)
M7928/2-24	16	.125	.905(22.99)	.037(0.94)	.277(7.03)	.280(7.11)
M7928/2-25	16	.138	1.061(26.95)	.037(0.94)	.237(6.02)	.280(7.11)
M7928/2-26	16	.138	1.155(29.34)	.037(0.94)	.302(7.67)	.280(7.11)
M7928/2-27	16	.164	1.155(29.34)	.037(0.94)	.302(7.67)	.280(7.11)
M7928/2-28	16	.164	1.405(35.69)	.037(0.94)	.390(9.91)	.280(7.11)
M7928/2-29	14	.112	.842(21.39)	.037(0.94)	.237(6.02)	.280(7.11)
M7928/2-30	14	.112	1.061(26.95)	.037(0.94)	.237(6.02)	.280(7.11)
M7928/2-31	14	.125	.905(22.99)	.037(0.94)	.277(7.03)	.280(7.11)
M7928/2-32	14	.138	1.061(26.95)	.037(0.94)	.237(6.02)	.280(7.11)
M7928/2-33	14	.138	1.155(29.34)	.037(0.94)	.302(7.67)	.280(7.11)
M7928/2-34	14	.164	1.155(29.34)	.037(0.94)	.302(7.67)	.280(7.11)
M7928/2-35	14	.164	1.405(35.69)	.037(0.94)	.390(9.91)	.280(7.11)
M7928/2-36	12	.112	1.062(26.97)	.046(1.17)	.237(6.02)	.361(9.17)
M7928/2-37	12	.112	1.281(32.54)	.046(1.17)	.237(6.02)	.361(9.17)
M7928/2-38	12	.125	1.124(28.55)	.046(1.17)	.277(7.03)	.361(9.17)
M7928/2-39	12	.138	1.281(32.54)	.046(1.17)	.237(6.02)	.361(9.17)
M7928/2-40	12	.138	1.359(34.52)	.046(1.17)	.302(7.67)	.361(9.17)
M7928/2-41	12	.164	1.359(34.52)	.046(1.17)	.302(7.67)	.361(9.17)
M7928/2-42	12	.164	1.609(40.87)	.046(1.17)	.390(9.91)	.361(9.17)
M7928/2-43	10	.112	1.062(26.97)	.046(1.17)	.237(6.02)	.361(9.17)
M7928/2-44	10	.112	1.281(32.54)	.046(1.17)	.237(6.02)	.361(9.17)
M7928/2-45	10	.125	1.124(28.55)	.046(1.17)	.277(7.03)	.361(9.17)
M7928/2-46	10	.138	1.281(32.54)	.046(1.17)	.237(6.02)	.361(9.17)
M7928/2-47	10	.138	1.359(34.52)	.046(1.17)	.302(7.67)	.361(9.17)
M7928/2-48	10	.164	1.359(34.52)	.046(1.17)	.302(7.67)	.361(9.17)
M7928/2-49	10	.164	1.609(40.87)	.046(1.17)	.390(9.91)	.361(9.17)

Downloaded from http://www.everyspec.com

TERMINALS, LUG AND SPLICES, CONDUCTOR, CRIMP STYLE, COPPER
TERMINAL, LUG, INSULATED, RING TONGUE, BELL-MOUTHED, TYPE II, CLASS 1
(FOR 150° C TOTAL CONDUCTOR TEMPERATURE)

(Applicable Specification: MIL-T-7928/4)

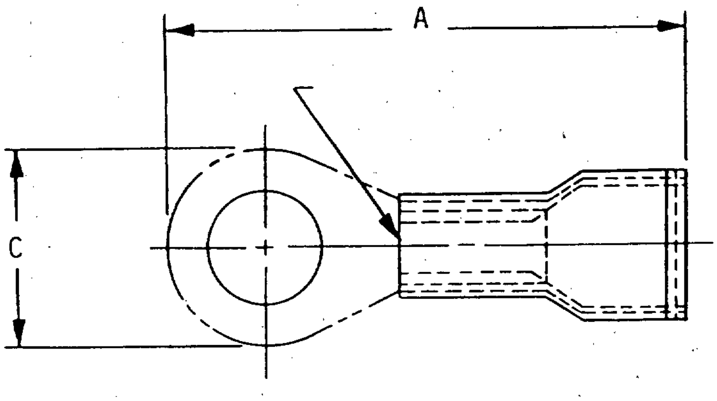

DRAWING A

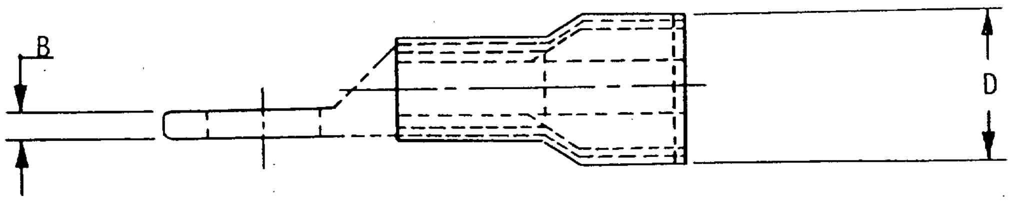

Downloaded from http://www.everyspec.com

PART NUMBER	STUD SIZE	STUD SIZE	A MAX	B MAX	C MAX	D MAX
M7928/4-143	26-24	.086	.740(18.79)	.028(0.71)	.210(5.33)	.280(7.11)
M7928/4-144	26-24	.112	.755(19.18)	.028(0.71)	.260(6.60)	.280(7.11)
M7928/4-145	26-24	.138	.855(21.72)	.028(0.71)	.260(6.60)	.280(7.11)
M7928/4-146	26-24	.164	.855(21.72)	.028(0.71)	.330(8.38)	.280(7.11)
M7928/4-147	26-24	.190	.865(21.97)	.028(0.71)	.330(8.38)	.280(7.11)
M7928/4-159	22-18	.086	.755(19.18)	.035(0.89)	.230(5.84)	.280(7.11)
M7928/4-148	22-18	.112	.755(19.18)	.035(0.89)	.230(5.84)	.280(7.11)
M7928/4-101	22-18	.138	.755(19.18)	.035(0.89)	.230(5.84)	.280(7.11)
M7928/4-102	22-18	.138	.865(21.97)	.035(0.89)	.260(6.60)	.280(7.11)
M7928/4-149	22-18	.164	.910(23.11)	.035(0.89)	.320(8.13)	.280(7.11)
M7928/4-103	22-18	.190	.910(23.11)	.035(0.89)	.473(12.01)	.280(7.11)
M7928/4-150	22-18	.250	1.090(27.68)	.035(0.89)	.473(12.01)	.280(7.11)
M7928/4-104	22-18	.312	1.090(27.68)	.035(0.89)	.473(12.01)	.280(7.11)
M7928/4-105	22-18	.375	1.320(33.53)	.035(0.89)	.540(13.72)	.280(7.11)
M7928/4-151	22-18	.500	1.320(33.53)	.035(0.89)	.720(18.29)	.280(7.11)
M7928/4-152	16-14	.112	.774(19.66)	.035(0.89)	.260(6.60)	.280(7.11)
M7928/4-106	16-14	.138	.774(19.66)	.035(0.89)	.260(6.60)	.280(7.11)
M7928/4-107	16-14	.138	.910(23.11)	.035(0.89)	.317(8.05)	.280(7.11)
M7928/4-153	16-14	.164	.910(23.11)	.035(0.89)	.317(8.05)	.280(7.11)
M7928/4-108	16-14	.190	.915(23.24)	.035(0.89)	.317(8.05)	.280(7.11)
M7928/4-154	16-14	.250	1.085(27.56)	.035(0.89)	.473(12.01)	.280(7.11)
M7928/4-109	16-14	.312	1.085(27.56)	.035(0.89)	.473(12.01)	.280(7.11)
M7928/4-110	16-14	.375	1.225(31.11)	.035(0.89)	.540(13.72)	.280(7.11)
M7928/4-155	16-14	.500	1.320(33.53)	.035(0.89)	.720(18.29)	.280(7.11)
M7928/4-111	12-10	.138	1.120(28.45)	.043(1.09)	.380(9.65)	.361(9.17)
M7928/4-156	12-10	.164	1.120(28.45)	.043(1.09)	.380(9.65)	.361(9.17)
M7928/4-112	12-10	.190	1.120(28.45)	.043(1.09)	.380(9.65)	.361(9.17)
M7928/4-157	12-10	.250	1.322(33.58)	.043(1.09)	.536(13.61)	.361)9.17)
M7928/4-113	12-10	.312	1.322(33.58)	.043(1.09)	.536(13.61)	.361(9.17)
M7928/4-114	12-10	.375	1.414(35.91)	.043(1.09)	.598(15.19)	.361(9.17)
M7928/4-158	12-10	.500	1.414(35.91)	.043(1.09)	.720(18.29)	.361(9.17)
M7928/4-115	8	.190	1.402(35.61)	.084(2.13)	.429(10.90)	.361(9.17)
M7928/4-116	8	.250	1.466(37.24)	.084(2.13)	.478(12.14)	.361(9.17)
M7928/4-117	8	.312	1.544(39.22)	.084(2.13)	.590(14.99)	.361(9.17)
M7928/4-118	8	.375	1.544(39.22)	.084(2.13)	.590(14.99)	.361(9.17)
M7928/4-119	6	.190	1.599(40.61)	.084(2.13)	.503(12.78)	.361(9.17)
M7928/4-120	6	.250	1.599(40.61)	.084(2.13)	.503(12.78)	.361(9.17)
M7928/4-121	6	.312	1.762(44.75)	.084(2.13)	.623(15.82)	.361(9.17)
M7928/4-122	6	.375	1.762(44.75)	.084(2.13)	.623(15.82)	.361(9.17)
M7928/4-123	4	.250	1.812(46.02)	.096(2.44)	.570(14.48)	.361(9.17)
M7928/4-124	4	.312	1.879(47.73)	.096(2.44)	.648(16.46)	.361(9.17)
M7928/4-125	4	.375	1.879(47.73)	.096(2.44)	.648(16.46)	.361(9.17)
M7928/4-126	2	.250	2.069(52.55)	.109(2.77)	.711(18.06)	.361(9.17)
M7928/4-127	2	.375	2.069(52.55)	.109(2.77)	.711(18.06)	.361(9.17)
M7928/4-128	2	.500	2.069(57.63)	.109(2.77)	.804(20.42)	.361(9.17)
M7928/4-129	1	.250	2.150(54.61)	.125(3.17)	.783(19.89)	.361(9.17)
M7928/4-130	1	.375	2.150(54.61)	.125(3.17)	.783(19.89)	.361(9.17)
M7928/4-131	1	.500	2.370(60.20)	.125(3.17)	.887(22.53)	.361(9.17)
M7928/4-132	0	.250	2.401(60.98)	.125(3.17)	.853(21.67)	.361(9.17)
M7928/4-133	0	.375	2.401(60.98)	.125(3.17)	.853(21.67)	.361(9.17)
M7928/4-134	0	.500	2.525(64.13)	.125(3.17)	.903(22.94)	.361(9.17)
M7928/4-135	00	.312	2.750(69.85)	.129(3.28	.956(24.28)	.361(9.17)
M7928/4-136	00	.375	2.750(69.85)	.129(3.28)	.956(24.28)	.361(9.17)
M7928/4-137	00	.500	2.750(69.85	.129(3.28)	.956(24.28)	.361(9.17)

Downloaded from http://www.everyspec.com

TERMINAL LUG AND SPLICES, CONDUCTOR, CRIMP STYLE, COPPER
TERMINAL LUG, CRIMP STYLE, COPPER, UNINSULATED, RING TONGUE
TYPE I, CLASS I
FOR 175° C TOTAL CONDUCTOR TEMPERATURE
(Applicable Specification: MIL-T-7928/7)

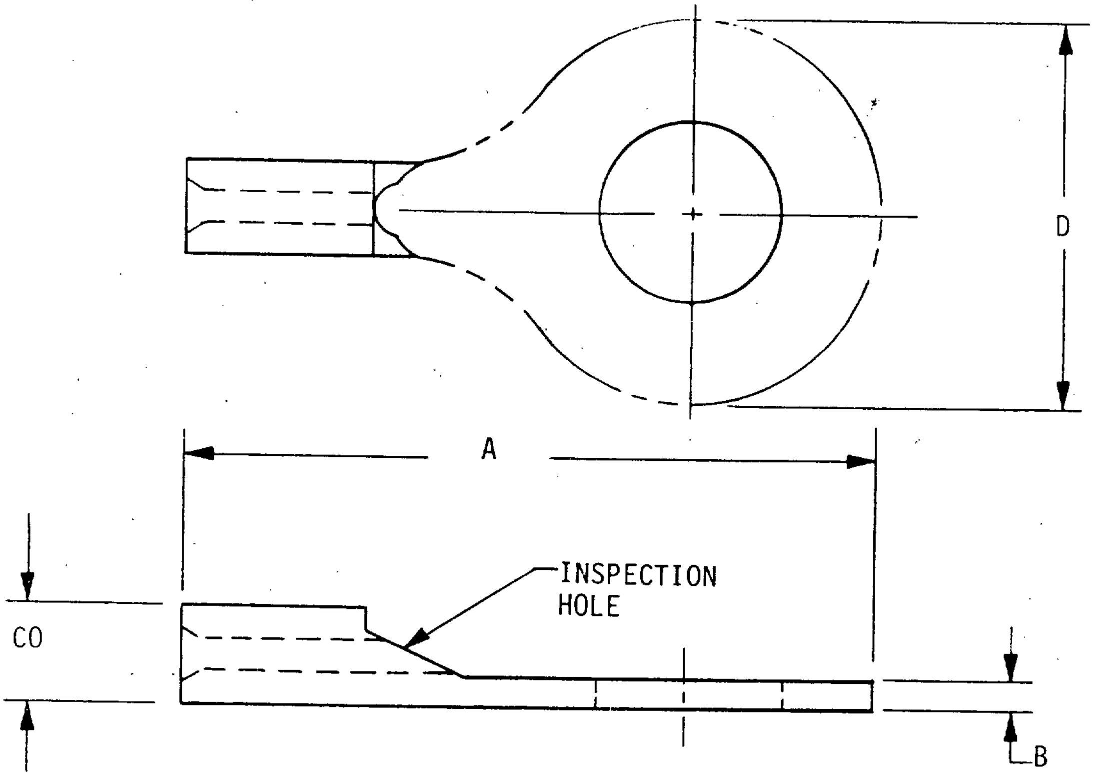

PART NUMBER	TERMINAL SIZE	STUD SIZE	A MAX	B MAX	C MAX DIA.	D MAX
M7928/7- 1	22-18	.086	.560(14.22)	.037(0.94)	.165(4.19)	.230(5.84)
M7928/7- 2	22-18	.112	.560)14.22)	.037(0.94)	.165(4.19)	.230(5.84)
M7928/7- 3	22-18	.138	.747(18.97)	.037(0.94)	.165(4.19)	.320(8.13)
M7928/7- 4	22-18	.190	.747(18.97)	.037(0.94)	.165(4.19)	.320(8.13)
M7928/7- 5	22-18	.312	.953(24.21)	.037(0.94)	.165(4.19)	.540(13.72)
M7928/7- 6	22-18	.375	1.125(28.57)	.037(0.94)	.165(4.19)	.609(15.47)
M7928/7- 7	16-14	.138	.747(18.97)	.037(0.94)	.192(4.88)	.320(8.13)
M7928/7- 8	16-14	.190	.747(18.97)	.037(0.94)	.192(4.88)	.320(8.13)
M7928/7- 9	16-14	.312	.953(24.21)	.037(0.94)	.192(4.88)	.540(13.72)
M7928/7-10	16-14	.375	1.125(28.57)	.037(0.94)	.192(4.88)	.609(15.47)
M7928/7-11	16-14	.112	.560(14.22)	.037(0.94)	.192(4.88)	.250(6.35)

Downloaded from http://www.everyspec.com

SECTION 204

TERMINALS, LUG, CABLE, CRIMP,
TYPE CLC

MIL-T-16366

Type CLC lug terminals shall be furnished in accordance with the following table.

Number to appear on lug terminal	Navy cable		Width (max)	1 bolt hole		2 bolt holes	
	Standard cable designation	Ampere rating (Max)		Bolt hole diameter nominal	Length (max)	Bolt hole diameter	Length (max)
14	14(7)	92	0.62 (15.75)	0.28 (7.11)	1.38 (35.05)	0.28 (7.11)	---
23	23(7)	117	0.69 (17.53)	0.28 (7.11)	1.50 (38.10)	0.28 (7.11)	---
30	30(19)	142	0.69 (17.53)	0.28 (7.11)	1.88 (47.75)	0.28 (7.11)	2.56 (65.02)
40	40(19)	165	0.69 (17.53)	0.28 (7.11)	1.88 (47.75)	0.28 (7.11)	2.38 (60.45)
50	50(19)	189	0.69 (17.53)	0.34 (8.64)	2.06 (52.32)	0.31 (7.87)	2.81 (71.42)
60	60(37)	215	0.75 (19.05)	0.34 (8.64)	2.06 (52.32)	0.31 (7.87)	2.75 (69.85)
75	75(37)	253	0.75 (19.05)	0.34 (8.64)	2.12 (53.85)	0.34 (8.64)	2.94 (74.68)
100	100(61)	300	0.88 (22.35)	0.34 (8.64)	2.12 (53.85)	0.34 (8.64)	2.88 (73.15)
125	125(61)	345	0.94 (23.88)	0.56 (14.22)	2.38 (60.45)	0.34 (8.64)	3.00 (76.20)
150	150(61)	400	1.00 (25.40)	0.56 (14.22)	2.75 (69.85)	0.38 (9.65)	3.44 (87.38)
200	200(61)	465	1.25 (31.75)	0.56 (14.22)	2.88 (73.15)	0.38 (9.65)	3.56 (90.42)
250	250(61)	540	1.25 (31.75)	0.56 (14.22)	3.00 (76.20)	0.44 (11.18)	3.44 (87.38)
300	300(91)	595	1.50 (38.10)	0.56 (14.22)	3.56 (90.42)	0.44 (11.18)	3.44 (87.38)
400	400(127)	740	1.62 (41.15)	0.56 (14.22)	3.81 (96.77)	0.44 (11.18)	4.62 (117.35)
500	500(127)	860	1.62 (41.15)	0.69 (17.53)	4.31 (109.47)	0.44 (11.18)	4.81 (132.17)
650	650(127)	1000	1.88 (47.75)	0.69 (17.53)	5.25 (133.35)	0.44 (11.18)	5.69 (144.53)
800	800(127)	1190	2.00 (50.80)	0.69 (17.53)	5.62 (142.75)	0.44 (11.18)	6.69 (169.93)
1000	1000(127)	1375	2.38 (60.45)	0.81 (20.57)	6.00 (152.40)	0.56 (14.22)	6.88 (174.75)
1600	1600(127)	1800	2.88 (73.15)	0.81 (20.57)	6.50 (165.10)	0.56 (14.22)	7.25 (184.15)

Downloaded from http://www.everyspec.com

TERMINALS, LUG, CABLE, CRIMP WITH INSULATION GRIP, TYPE CLCG

MIL-E-16366

Type CLCG lug terminals shall conform to all requirements of type CLC except the length and number to appear on lug terminals shall be as follows:

Number to appear on lug terminals	Length (max)
SSGA-300	4.81(122.17)
SHFA-300	4.81(122.17)
SHFP-300	4.94(125.48)
SSGA-400	5.12(130.05)
SHFA-400	5.12(130.05)
SHFP-400	5.25(133.35)
SSGA-500	5.50(139.70)
SHFA-500	5.50(139.70)
SHFP-500	5.50(139.70)
SSGA-650	8.44(214.38)
SHFA-650	8.44(214.38)
SHFP-650	8.44(214.38)
SSGA-800	9.12(231.65)
SHFA-800	9.12(231.65)
SHFP-800	9.12(231.65)

Downloaded from http://www.everyspec.com

SECTION 205

TERMINAL, LUG, CRIMP STYLE, COPPER, INSULATED (SERVO-COMPONENTS) TYPE II, CLASS I, FOR 125 DEGREES C TOTAL CONDUCTOR TEMPERATURE.

MS 17182

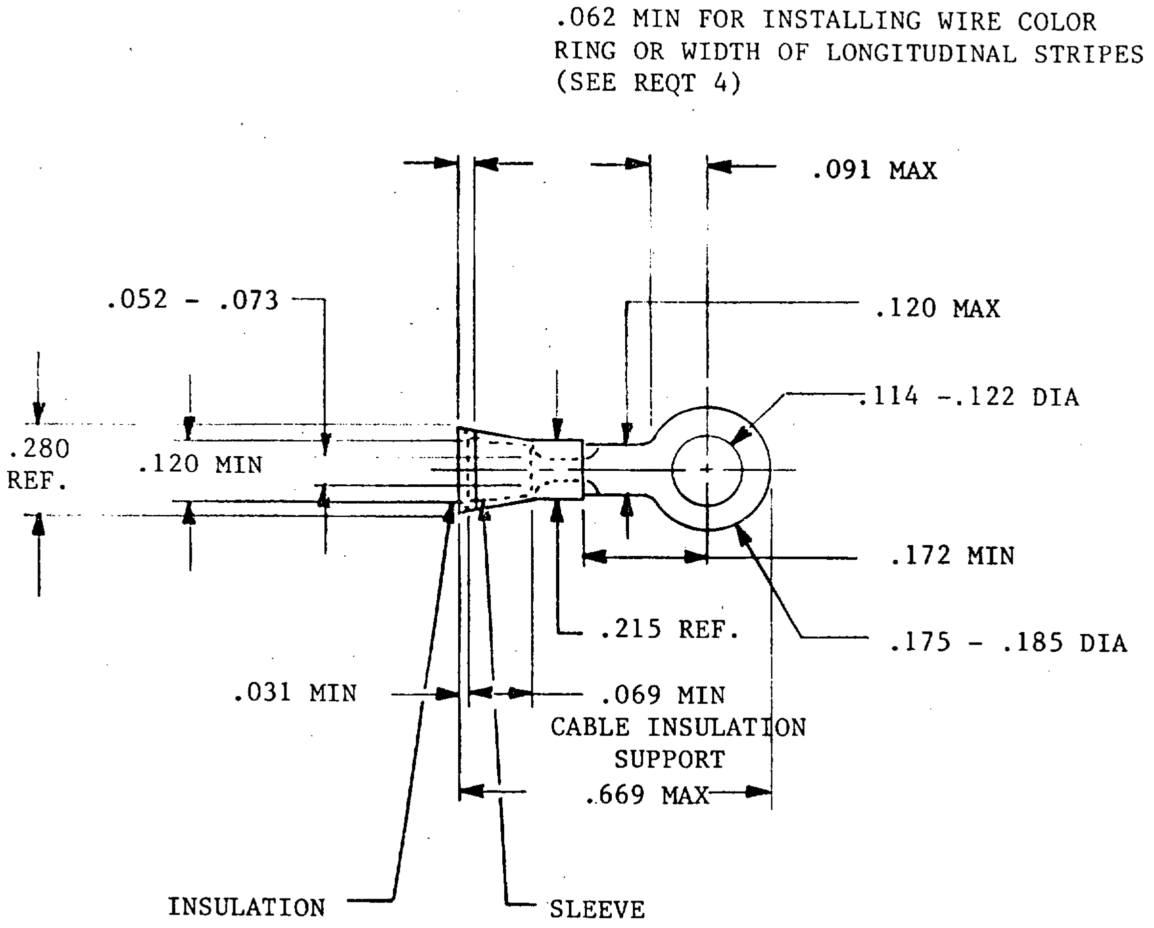

TONGUE MATERIAL THK = .027 - .035

WIRE SIZE 22-18

MS 17182-1

Downloaded from http://www.everyspec.com

MS 17182

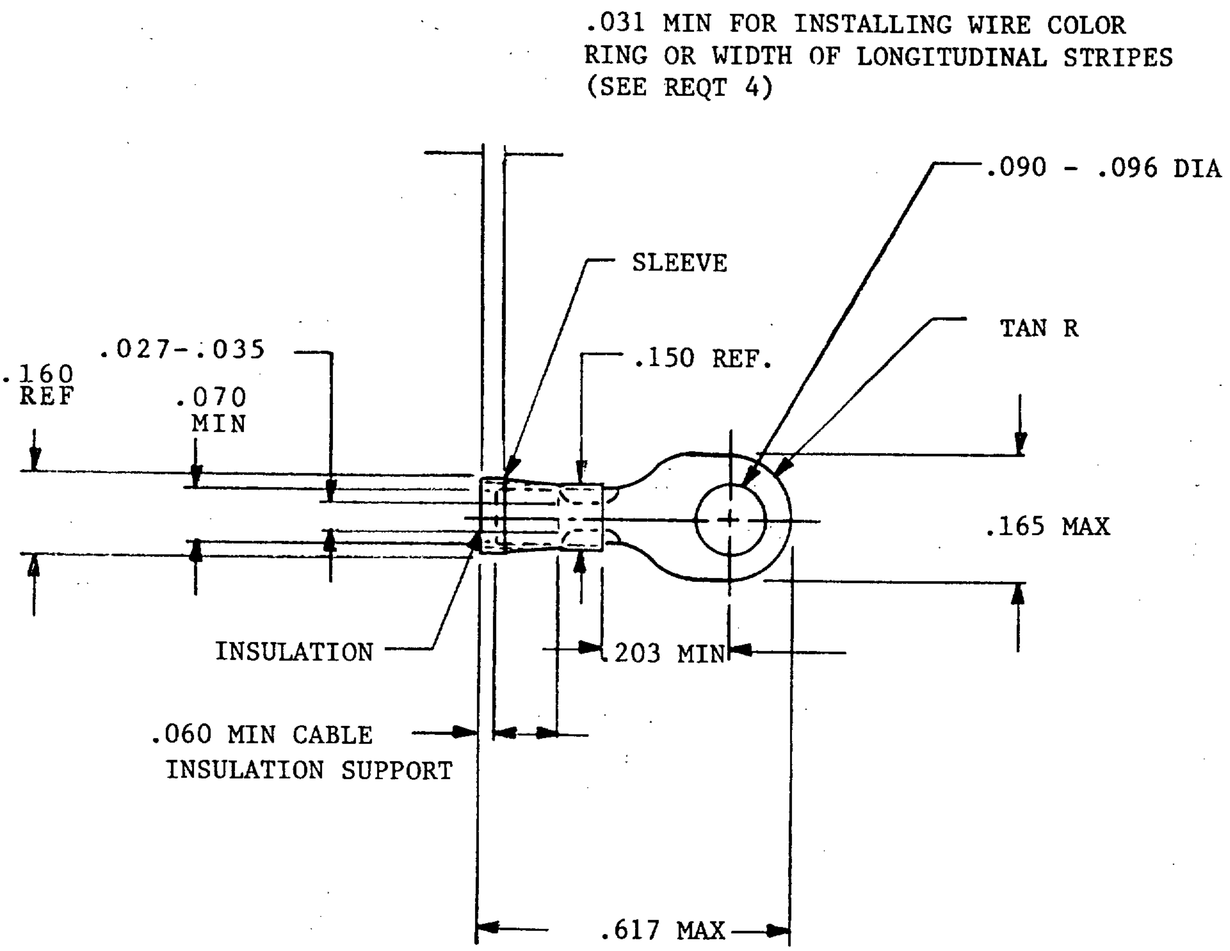

TONGUE MATERIAL THK - .018 - .025
WIRE SIZE 26-24

MS 17182 -2

Downloaded from http://www.everyspec.com

SECTION 206

TERMINAL LUG, CRIMP STYLE, STRAIGHT TYPE, FOR ALUMINUM AIRCRAFT WIRE, CLASS 1

MS25435

(APPLICABLE SPECIFICATION: MIL-T-7099)

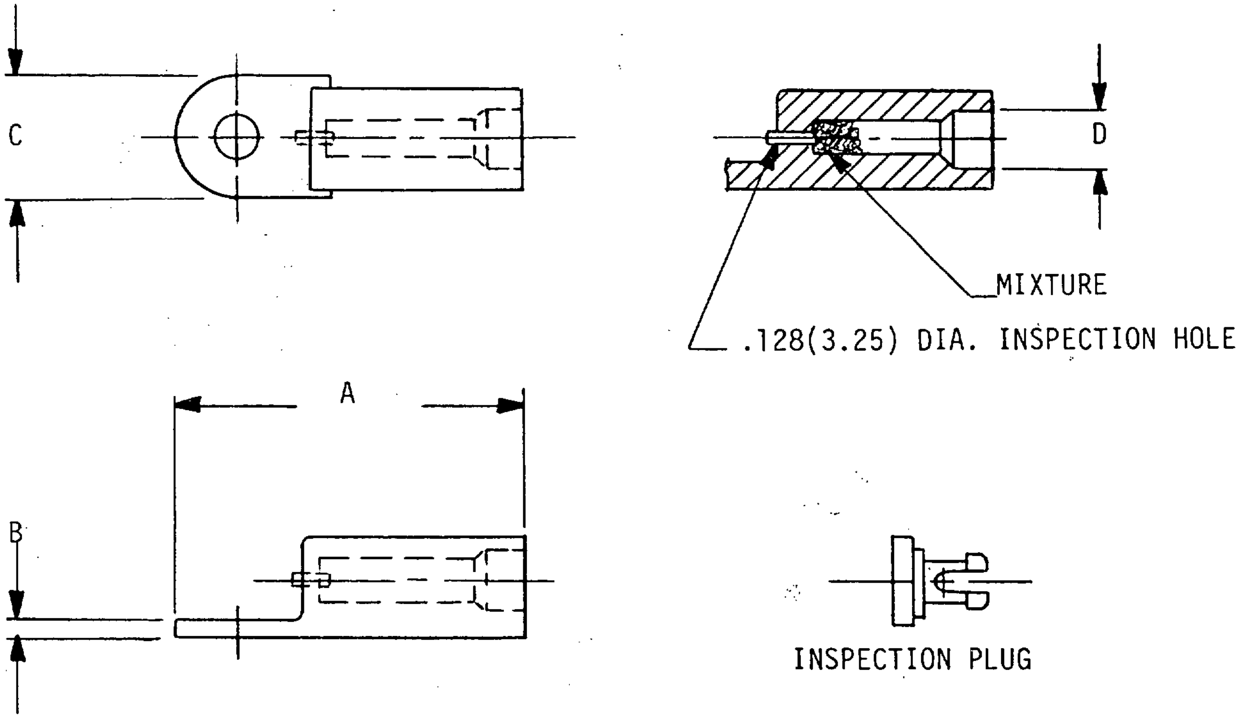

Downloaded from http://www.everyspec.com

Part Number	Cable Size	A	B	C	D Dia
MS25435-1	8	1.889(47.98)	.096(2.44)	.688(17.47)	.250(6.35)
MS25435-2	8	1.889(47.98)	.096(2.44)	.688(17.47)	.250(6.35)
MS25435-3	8	2.076(52.73)	.096(2.44)	.875(22.22)	.250(6.35)
MS25435-4	8	2.076(52.73)	.096(2.44)	.875(22.22)	.250(6.35)
MS25435-5	6	2.014(51.15)	.112(2.84)	.688(17.47)	.313(7.95)
MS25435-6	6	2.014(51.15)	.112(2.84)	.688(17.47)	.313(7.95)
MS25435-7	6	2.201(55.90)	.112(2.84)	.875(22.22)	.313(7.95)
MS24435-8	6	2.201(55.90)	.112(2.84)	.875(22.22)	.313(7.95)
MS25435-9	4	2.139(54.33)	.128(3.25)	.688(17.47)	.375(9.52)
MS25435-10	4	2.139(54.33)	.128(3.25)	.688(17.47)	.375(9.52)
MS25435-11	4	2.326(59.08)	.128(3.25)	.875(22.22)	.375(9.52)
MS25435-12	4	2.326(59.08)	.128(3.25)	.875(22.22)	.375(9.52)
MS25435-13	2	2.467(62.66)	.143(3.63)	.875(22.22)	.469(11.81)
MS25435-14	2	2.467(62.66)	.143(3.63)	.875(22.22)	.469(11.81)
MS25435-15	2	2.467(62.66)	.143(3.63)	.875(22.22)	.469(11.81)
MS25435-16	2	2.756(70.00)	.143(3.63)	1.187(30.15)	.469(11.81)
MS25435-17	1	2.467(62.66)	.143(3.63)	.875(22.22)	.516(13.11)
MS25435-18	1	2.467(62.66)	.143(3.63)	.875(22.22)	.516(13.11)
MS25435-19	1	2.467(62.66)	.143(3.63)	.875(22.22)	.516(13.11)
MS25435-20	1	2.756(70.00)	.143(3.63)	1.187(30.15)	.516(13.11)
MS25435-21	0	2.529(64.24)	.159(4.04)	.875(22.22)	.563(14.30)
MS25435-22	0	2.529(64.24)	.159(4.04)	.875(22.22)	.563(14.30)
MS25435-23	0	2.529(64.24)	.159(4.04)	.875(22.22)	.563(14.30)
MS25435-24	0	2.841(72.16)	.159(4.04)	1.187(30.15)	.563(14.30)
MS25435-25	00	2.591(65.81)	.190(4.83)	.875(22.22)	.625(15.87)
MS25435-26	00	2.591(65.81)	.190(4.83)	.875(22.22)	.625(15.87)
MS25435-27	00	2.903(73.74)	.190(4.83)	1.187(30.15)	.625(15.87)
MS25435-28	000	2.796(71.02)	.190(4.83)	1.000(25.40)	.703(17.86)
MS25435-29	000	2.966(75.34)	.190(4.83)	1.187(30.15)	.703(17.86)
MS25435-30	0000	2.952(74.98)	.206(5.23)	1.000(25.40)	.766(19.46)
MS25435-31	0000	3.122(79.30)	.206(5.23)	1.187(30.15)	.766(19.46)

Downloaded from http://www.everyspec.com

TERMINAL-LUG, CRIMP STYLE, 90° UPRIGHT TYPE, FOR ALUMINUM AIRCRAFT WIRE, CLASS 1

(MS25436)

(APPLICABLE SPECIFICATION: MIL-T-7099)

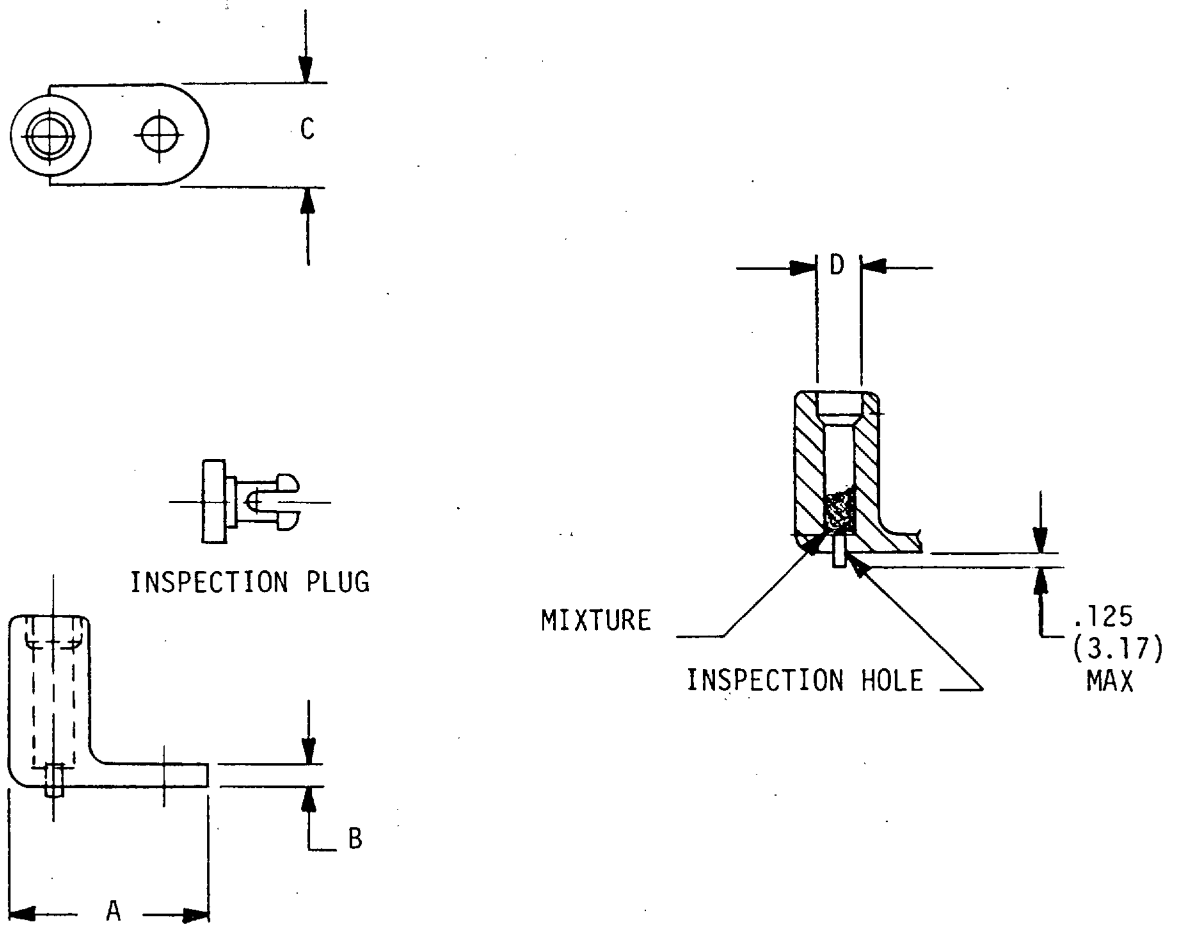

Downloaded from http://www.everyspec.com

PART NUMBER	A	B	C	D
MS25436-1	1.191(30.25)	.096(2.44)	.688(17.47)	.250(6.35)
MS25436-2	1.191(30.25)	.096(2.44)	.688(17.47)	.250(6.35)
MS25436-3	1.413(35.86)	.096(2.44)	.875(22.22)	.250(6.35)
MS25436-4	1.413(35.86)	.096(2.44)	.875(22.22)	.250(6.35)
MS25436-5	1.245(31.62)	.112(2.84)	.688(17.47)	.313(7.95)
MS25436-6	1.245(31.62)	.112(2.84)	.688(17.47)	.313(7.95)
MS25436-7	1.471(37.36)	.112(2.84)	.875(22.22)	.313(7.95)
MS25436-8	1.471(37.36)	.112(2.84)	.875(22.22)	.313(7.95)
MS25436-9	1.347(34.21)	.128(3.25)	.688(17.47)	.375(9.52)
MS25436-10	1.347(34.21)	.128(3.25)	.688(17.47)	.375(9.52)
MS25436-11	1.568(39.83)	.128(3.25)	.875(22.22)	.375(9.52)
MS25436-12	1.568(39.83)	.128(3.25)	.875(22.22)	.375(9.52)
MS25436-13	1.660(42.16)	.143(3.63)	.875(22.22)	.469(11.81)
MS25436-14	1.660(42.16)	.143(3.63)	.875(22.22)	.469(11.81)
MS25436-15	1.660(42.16)	.143(3.63)	.875(22.22)	.469(11.81)
MS25436-16	1.971(50.06)	.143(3.63)	1.187(30.15)	.469(11.81)
MS25436-17	1.693(43.00)	.143(3.63)	.875(22.22)	.516(13.11)
MS25436-18	1.693(43.00)	.143(3.63)	.875(22.22)	.516(13.11)
MS25436-19	1.693(43.00)	.143(3.63)	.875(22.22)	.516(13.11)
MS25436-20	2.003(50.88)	.143(3.63)	1.187(30.15)	.516(13.11)
MS25436-21	1.719(43.66)	.159(4.04)	.875(22.22)	.563(14.30)
MS25436-22	1.719(43.66)	.159(4.04)	.875(22.22)	.563(14.30)
MS25436-23	1.719(43.66)	.159(4.04)	.875(22.22)	.563(14.30)
MS25436-24	2.069(52.55)	.159(4.04)	1.187(30.15)	.563(14.30)
MS25436-25	1.848(46.94)	.190(4.83)	.875(22.22)	.625(15.87)
MS25436-26	1.848(46.94)	.190(4.83)	.875(22.22)	.635(15.87)
MS25436-27	2.160(54.86)	.190(4.83)	1.187(30.15)	.625(15.87)
MS25436-28	2.013(51.13)	.190(4.83)	1.000(25.40)	.703(17.86)
MS25436-29	2.207(56.06)	.190(4.83)	1.187(30.15)	.703(17.86)
MS25436-30	2.112(53.64)	.206(5.23)	1.000(25.40)	.766(19.46)
MS25436-31	2.316(58.83)	.206(5.23)	1.187(30.15)	.766(19.46)

Downloaded from http://www.everyspec.com

TERMINAL, LUG, CRIMP STYLE, LEFT ANGLE TYPE,
FOR ALUMINUM AIRCRAFT WIRE, CLASS I

(MS25437)

(Applicable Specification: MIL-T-7099)

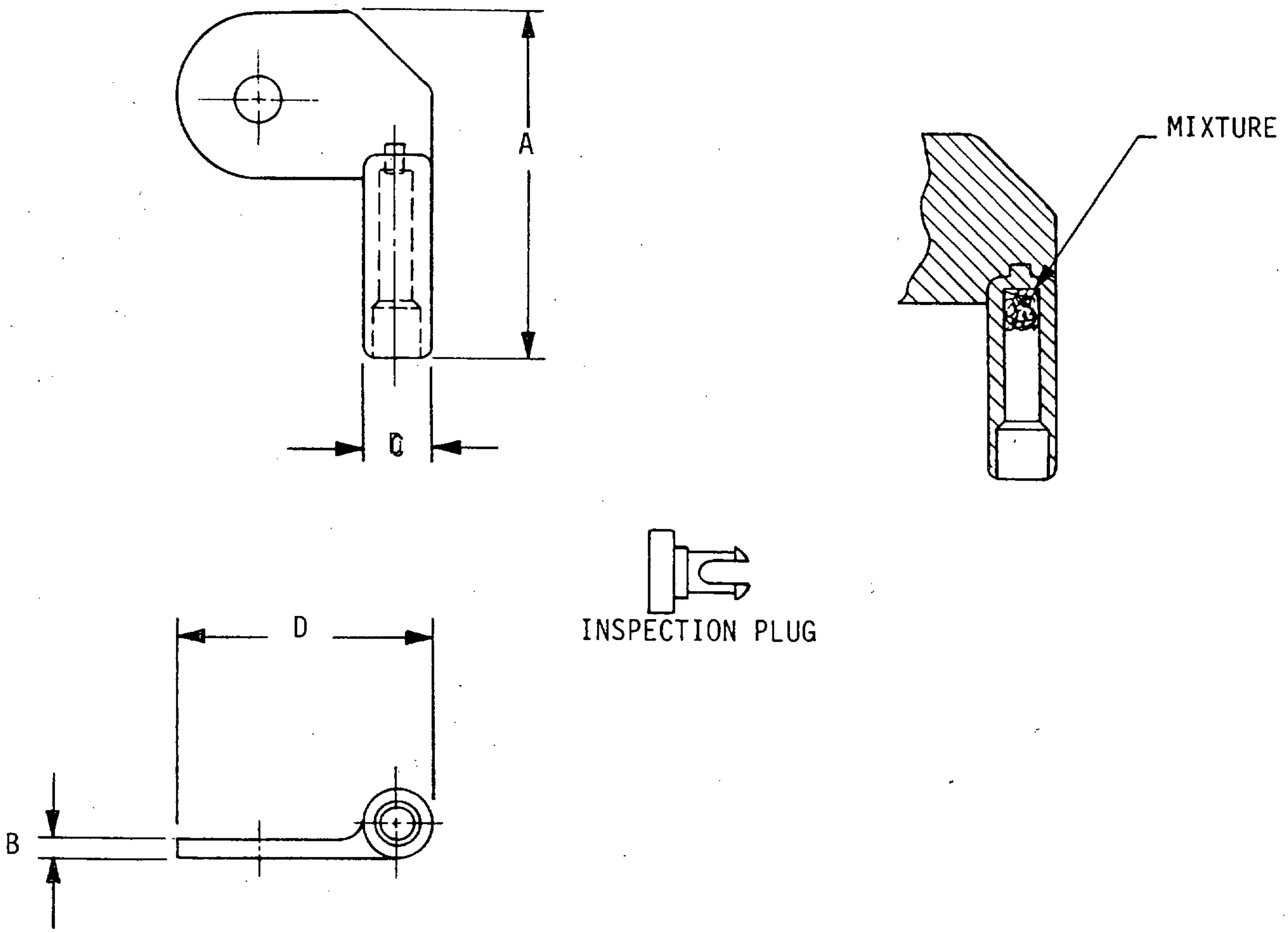

Downloaded from http://www.everyspec.com

PART NUMBER	A	B	C	D
MS25437- 1	1.617(41.07)	.096 (2.44)	.355(9.02)	1.095(27.81)
MS25437- 2	1.617(41.07)	.096 (2.44)	.355(9.02)	1.095(27.81)
MS25437- 3	1.808(45.92)	.096 (2.44)	.355(9.02)	1.342(34.09)
MS25437- 4	1.808(45.92)	.096 (2.44)	.355(9.02)	1.342(34.09)
MS25437- 5	1.742(44.25)	.112 (2.84)	.413(10.49)	1.230(31.24)
MS25437- 6	1.742(44.25)	.112 (2.84)	.413(10.49)	1.230(31.24)
MS25437- 7	1.935(49.15)	.112 (2.84)	.413(10.49)	1.400(35.56)
MS25437- 8	1.935(49.15)	.112 (2.84)	.413(10.49)	1.400(35.56)
MS25437- 9	1.867(47.42)	.128 (3.25)	.510(12.95)	1.250(31.75)
MS25437-10	1.867(47.42)	.128 (3.25)	.510(12.95)	1.250(31.75)
MS25437-11	2.055(52.20)	.128 (3.25)	.510(12.95)	1.500(38.10)
MS25437-12	2.055(52.20)	.128 (3.25)	.510(12.95)	1.500(38.10)
MS25437-13	2.196(55.78)	.143 (3.63)	.601(15.26)	1.600(40.64)
MS25437-14	2.196(55.78)	.143 (3.63)	.601(15.26)	1.600(40.64)
MS25437-15	2.196(55.78)	.143 (3.63)	.601(15.26)	1.600(40.64)
MS25437-16	2.508(63.70)	.143 (3.63)	.601(15.26)	1.900(48.26)
MS25437-17	2.196(55.78)	.143 (3.63)	.633(16.08)	1.615(41.02)
MS25437-18	2.196(55.78)	.143 (3.63)	.633(16.08)	1.615(41.02)
MS25437-19	2.196(55.78)	.143 (3.63)	.633(16.08)	1.615(41.02)
MS25437-20	2.508(63.70)	.143 (3.63)	.633(16.08)	1.935(49.15)
MS25437-21	2.240(56.89)	.159 (4.04)	.699(17.75)	1.710(43.43)
MS25437-22	2.240(56.89)	.159 (4.04)	.699(17.75)	1.710(43.43
MS25437-23	2.240(56.89)	.159 (4.04)	.699(17.75)	1.710(43.43)
MS25437-24	2.570(65.28)	.159 (4.04)	.699(17.75)	2.015(51.18)
MS25437-25	2.323(59.00)	.190 (4.83)	.789(20.04)	1.795(45.59)
MS25437-26	2.323(59.00)	.190 (4.83)	.789(20.04)	1.795(45.59)
MS25437-27	2.632(66.85)	.190 (4.83)	.789(20.04)	2.105(53.47)
MS25437-28	2.505(63.63)	.190 (4.83)	.836(21.23)	1.994(50.65)
MS25437-29	2.695(68.45)	.190 (4.83)	.836(21.23)	2.145(54.48)
MS25437-30	2.663(67.64)	.206 (5.23)	.947(24.05)	2.103(53.42)
MS25437-31	2.851(72.41)	.206 (5.23)	.947(24.05)	2.265(57.53)

Downloaded from http://www.everyspec.com

TERMINAL, LUG, CRIMP STYLE, RIGHT ANGLE TYPE,
FOR ALUMINUM AIRCRAFT WIRE,
CLASS I

MS25438

(Applicable Specification: MIL-T-7099)

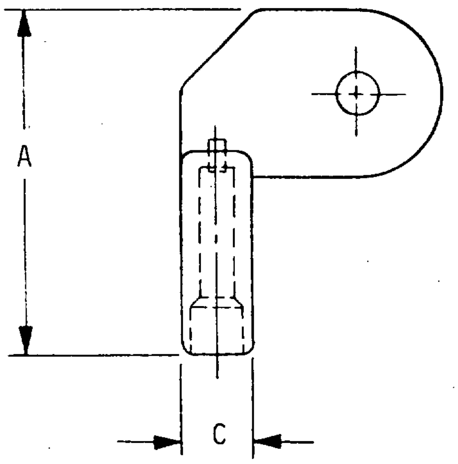

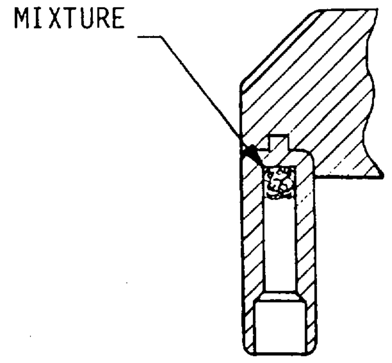

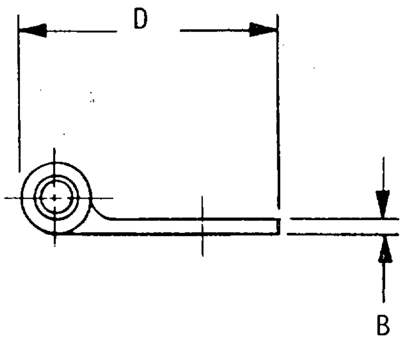

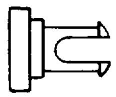

INSPECTION PLUG

Downloaded from http://www.everyspec.com

PART NUMBER	A	B	C	D
MS25438- 1	1.617(41.07)	.096(2.44)	.355(9.02)	1.095(27.81)
MS25438- 2	1.617(41.07)	.096(2.44)	.355(9.02)	1.095(27.81)
MS25438- 3	1.808(45.92)	.096(2.44)	.355(9.02)	1.342(34.09)
MS25438- 4	1.808(45.92)	.096(2.44)	.355(9.02)	1.342(34.09)
MS25438- 5	1.742(44.25)	.112(2.84)	.413(10.49)	1.230(31.24)
MS25438- 6	1.742(44.25)	.112(2.84)	.413(10.49)	1.230(31.24)
MS25438- 7	1.935(49.15)	.112(2.84)	.413(10.49)	1.400(35.56)
MS25438- 8	1.935(49.15)	.112(2.84)	.413(10.49)	1.400(35.56)
MS25438- 9	1.867(47.42)	.128(3.25)	.510(12.95)	1.250(31.75)
MS25438-10	1.867(47.42)	.128(3.25)	.510(12.95)	1.250(31.75)
MS25438-11	2.055(52.20)	.128(3.25)	.510(12.95)	1.500(38.10)
MS25438-12	2.055(52.20)	.128(3.25)	.510(12.95)	1.500(38.10)
MS25438-13	2.196(55.78)	.143(3.63)	.601(15.26)	1.600(40.64)
MS25438-14	2.196(55.78)	.143(3.63)	.601(15.26)	1.600(40.64)
MS25438-15	2.196(55.78)	.143(3.63)	.601(15.26)	1.600(40.64)
MS25438-16	2.508(63.70)	.143(3.63)	.601(15.26)	1.900(48.26)
MS25438-17	2.196(55.78)	.143(3.63)	.633(16.08)	1.615(41.02)
MS25438-18	2.196(55.78)	.143(3.63)	.633(16.08)	1.615(41.02)
MS25438-19	2.196(55.78)	.143(3.63)	.633(16.08)	1.615(41.02)
MS25438-20	2.508(63.70)	.143(3.63)	.633(16.08)	1.935(49.15)
MS25438-21	2.240(56.89)	.159(4.04)	.699(17.75)	1.710(43.43)
MS25438-22	2.240(56.89)	.159(4.04)	.699(17.75)	1.710(43.43)
MS25438-23	2.240(56.89)	.159(4.04)	.699(17.75)	1.710(43.43)
MS25438-24	2.570(65.28)	.159(4.04)	.699(17.75)	2.015(51.18)
MS25438-25	2.323(59.00)	.190(4.83)	.789(20.04)	1.795(45.59)
MS25438-26	2.323(59.00)	.190(4.83)	.789(20.04)	1.795(45.59)
MS25438-27	2.632(66.85)	.190(4.83)	.789(20.04)	2.105(53.47)
MS25438-28	2.505(63.63)	.190(4.83)	.836(21.73)	1.994(50.65)
MS25438-29	2,695(68.45)	.190(4.83)	.836(21.73)	2.145(54.48)
MS25438-30	2.633(67.64)	.206(5.23)	.947(24.05)	2.103(53.42)
MS25438-31	2.851(72.41)	.206(5.23)	.947(24.05)	2.265(57.53)

Downloaded from http://www.everyspec.com

SPLICE, PERMANENT, CRIMP STYLE, 2 WAY TYPE,
FOR ALUMINUM AIRCRAFT WIRE,CLASS 2
(MS25439)

(Applicable Specification: MIL-T-7099)

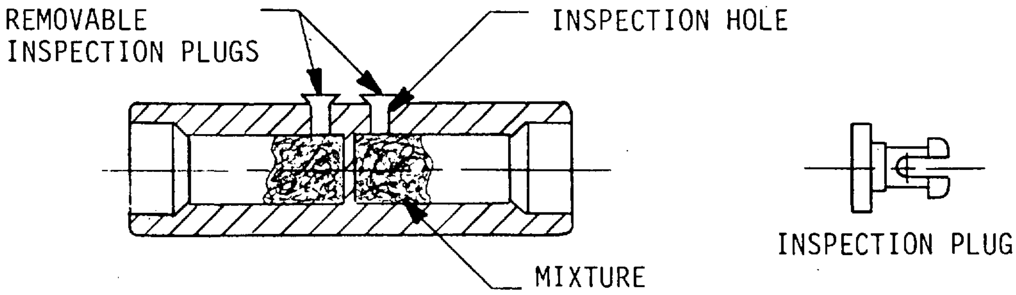

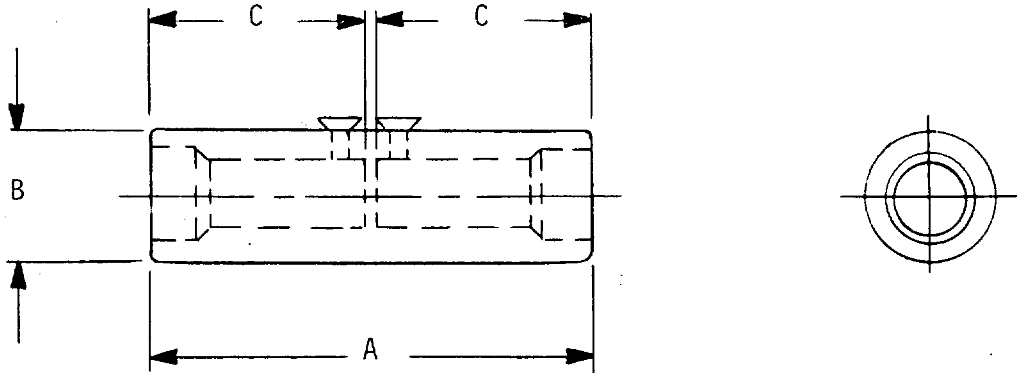

PART NUMBER	A	B	C
MS25439-1	2.338(59.38)	.355(9.02)	1.125(28.57)
MS25439-2	2.443(62.05)	.413(10.49)	1.164(29.56)
MS25439-3	2.839(72.11)	.510(12.95)	1.364(34.64)
MS25439-4	3.125(79.37)	.601(15.26)	1.505(38.23)
MS25439-5	3.125(79.37)	.633(16.08)	1.505(38.23)
MS25439-6	3.243(82.37)	.699(17.75)	1.564(39.73)
MS25439-7	3.312(84.12)	.789(20.04)	1.598(40.59)
MS25439-8	3.437(87.30)	.836(21.23)	1.661(42.19)
MS25439-9	3.719(94.46)	.947(24.05)	1.802(45.77)

Downloaded from http://www.everyspec.com

(This page left blank)

Downloaded from http://www.everyspec.com

SECTION 207

TERMINAL, LUG, SOLDER TYPE,
COPPER STAMPING, ONE HOLE

(MS35430)

(Applicable Specification: MIL-T-15659)

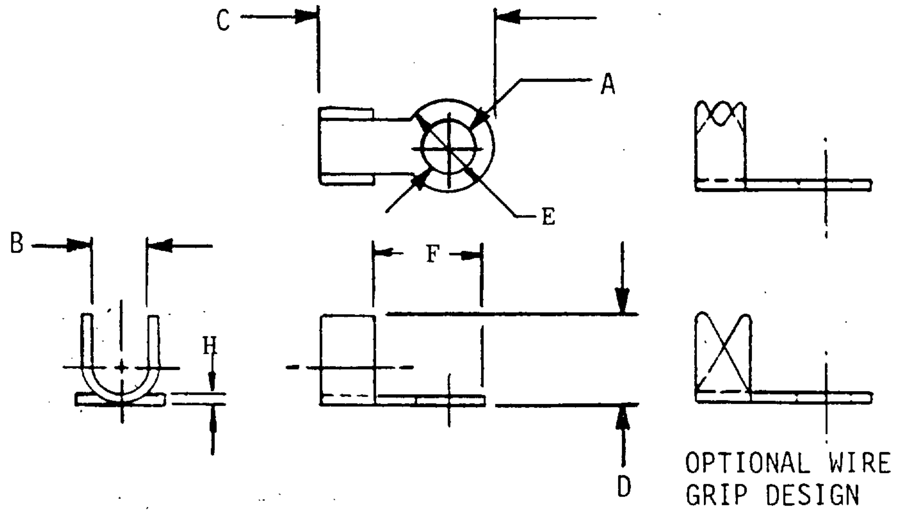

PART NUMBER	WIRE SIZE AWG	STUD SIZE	A HOLE DIA MIN	MAX	B	C	D	E	F	H
MS35430-1	14-20	2	.089	.096	.078	.562	.156	.141	.266	.016
MS35430-2	14-20	2	.089	.096	.078	.562	.156	.281	.391	.020
MS35430-3	14-20	4	.115	.127	.078	.562	.156	.281	.391	.020
MS35430-4	14-20	6	.141	.153	.078	.562	.156	.281	.391	.032
MS35430-5	14-20	8	.167	.179	.078	.562	.156	.281	.391	.032
MS35430-6	14-20	10	.193	.205	.078	.562	.156	.281	.391	.032
MS35430-7	10-12	4	.115	.127	.156	.562	.187	.312	.391	.020
MS35430-8	10-12	6	.141	.153	.156	.562	.187	.312	.391	.032
MS35430-9	10-12	8	.167	.179	.156	.562	.187	.312	.391	.032
MS35430-10	10-12	10	.193	.205	.156	.562	.187	.312	.391	.032
MS35430-11	6-8	6	.141	.153	.187	.562	.312	.312	.391	.032
MS35430-12	6-8	8	.167	.179	.187	.562	.312	.312	.391	.040
MS35430-13	6-8	10	.193	.205	.187	.562	.312	.312	.391	.040
MS35430-27	14-20	6	.141	.153	.062	.500	.156	.250	.312	.032

Downloaded from http://www.everyspec.com

(MS35430)

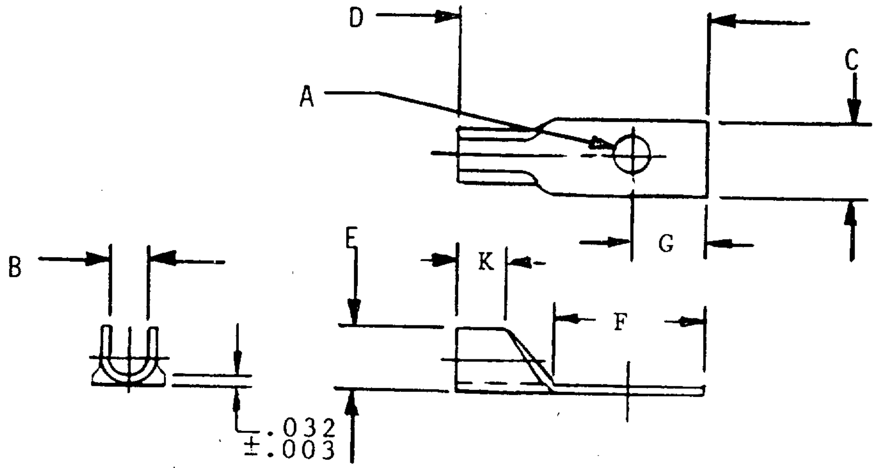

PART NUMBER	WIRE SIZE AWG	STUD SIZE	A HOLE DIA MIN	A HOLE DIA MAX	B	C	D	E	F	G	K
MS35430-14	10	6	.141	.153	.125	.312	1.094	.187	.594	.344	.250
MS35430-16	10	10	.193	.205	.125	.375	.750	.187	.437	.250	.180
MS35430-17	10	10	.193	.205	.125	.375	1.187	.187	.625	.312	.250
MS35430-18	10	10	.193	.205	.125	.375	1.250	.187	.750	.375	.250

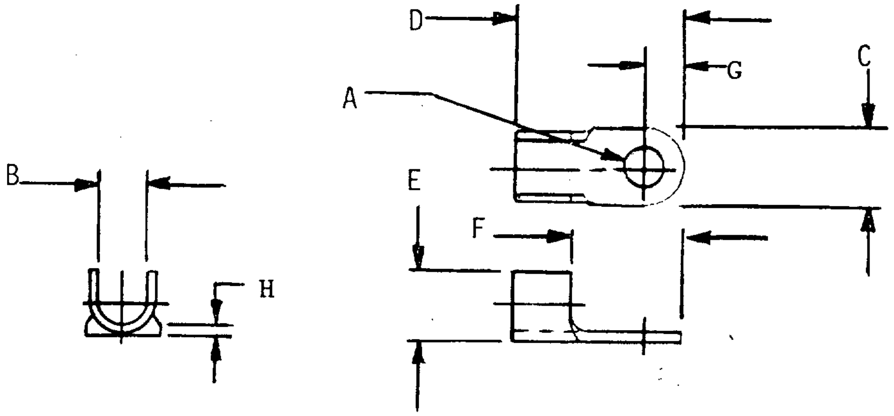

PART NUMBER	WIRE SIZE AWG	STUD SIZE	A HOLE DIA MIN	A HOLE DIA MAX	B	C	D	E	F	G	H
MS35430-19	1-2	.250	.258	.258	.406	.562	1.594	.781	.969	.344	.091
MS35430-20	1-2	.312	.320	.347	.406	1.062	1.594	.781	.969	.344	.091
MS35430-21	1-2	.375	.383	.410	.406	1.062	1.594	.781	.969	.344	.091
MS35430-22	0-00	.312	.320	.347	.500	.750	1.687	.828	1.000	.375	.091
MS35430-23	0-00	.375	.383	.410	.500	.750	1.687	.828	1.000	.375	.091
MS35430-15	10	#10	.193	.205	.125	.312	.594	.187	---	.156	.032

Downloaded from http://www.everyspec.com

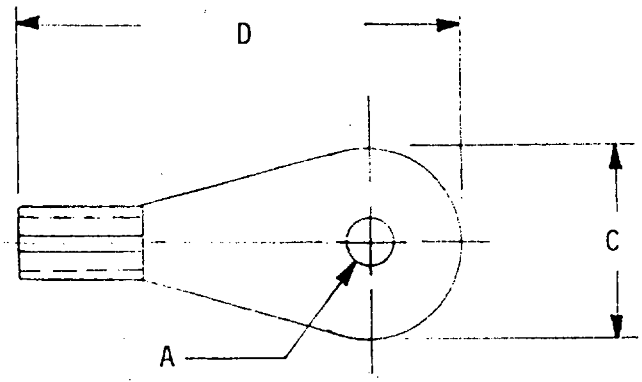

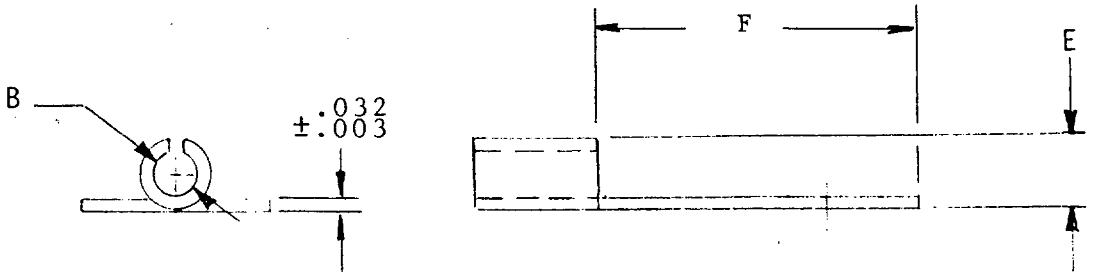

PART NUMBER	WIRE SIZE AWG	STUD SIZE	A HOLE DIA MIN	A HOLE DIA MAX	B	C	D	E	F
MS35430-24	10	4	.115	.127	.125	.281	1.215	.187	.828
MS35430-25	10	10	.193	.205	.125	.375	.812	.187	.469
MS35430-26	10	10	.193	.205	.125	.375	1.125	.187	.812

Downloaded from http://www.everyspec.com

TERMINAL, LUG, SOLDER TYPE,
COPPER STAMPING, ONE HOLE, FLAT

(MS35431)

(Applicable Specification: MIL-T-15659)

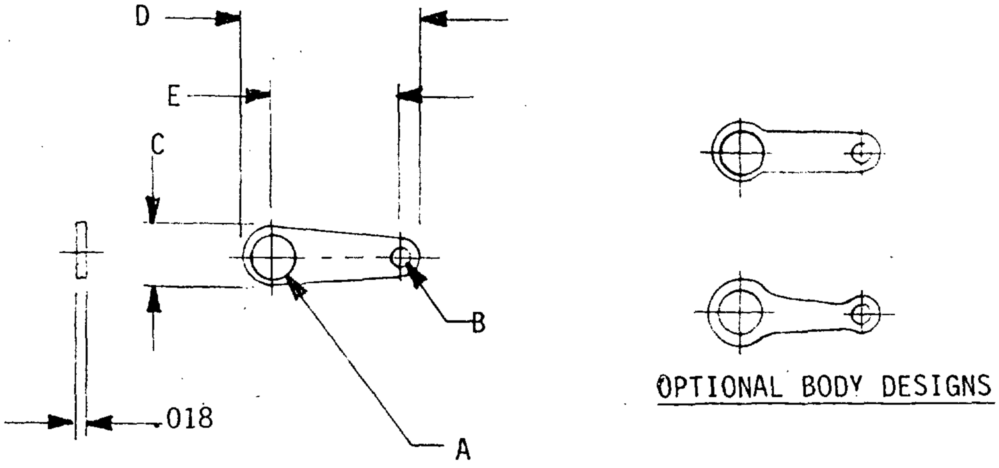

PART NUMBER	WIRE SIZE AWG	STUD SIZE	A HOLE DIA MIN	A HOLE DIA MAX	B	C	D	E
MS35431-1	12	4	.115	.127	.094	.312	.625	.375
MS35431-2	12	4	.115	.127	.094	.312	.875	.625
MS35431-3	12	6	.141	.153	.094	.312	.625	.375
MS35431-4	12	6	.141	.153	.094	.312	.875	.625
MS35431-5	12	8	.167	.179	.094	.312	.625	.375
MS35431-6	12	8	.167	.179	.094	.312	.875	.625
MS35431-7	12	10	.193	.205	.094	.312	.625	.375
MS35431-8	12	10	.193	.205	.094	.312	.875	.625

Downloaded from http://www.everyspec.com

TERMINAL, LUG, SOLDER TYPE,
COPPER STAMPING, ONE HOLE, FLAT

(MS35434)

(Applicable Specification: MIL-T-15659)

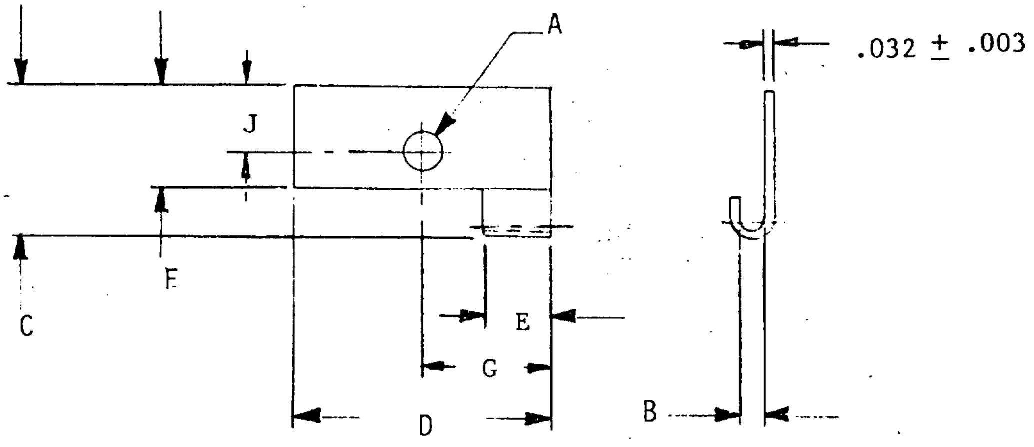

PART NUMBER	WIRE SIZE AWG	STUD SIZE	A HOLE DIA MIN	A HOLE DIA MAX	B	C	D	E	F	G	J
MS35434-1	16	6	.141	.153	.062	.500	.875	.219	.344	.438	.219

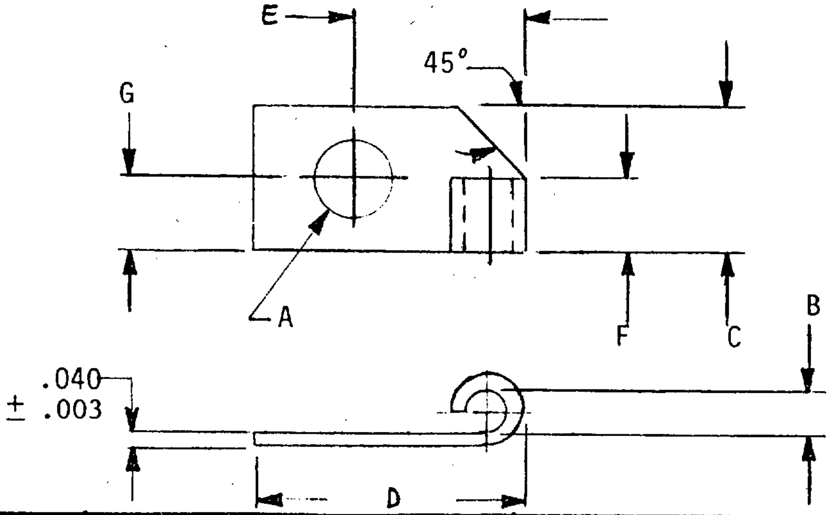

PART NUMBER	WIRE SIZE AWG	STUD SIZE	A HOLE DIA MIN	A HOLE DIA MAX	B	C	D	E	F	G
MS35434-2	10	10	.193	.206	.109	.375	.687	.437	.187	.187

Downloaded from http://www.everyspec.com

(MS35434)

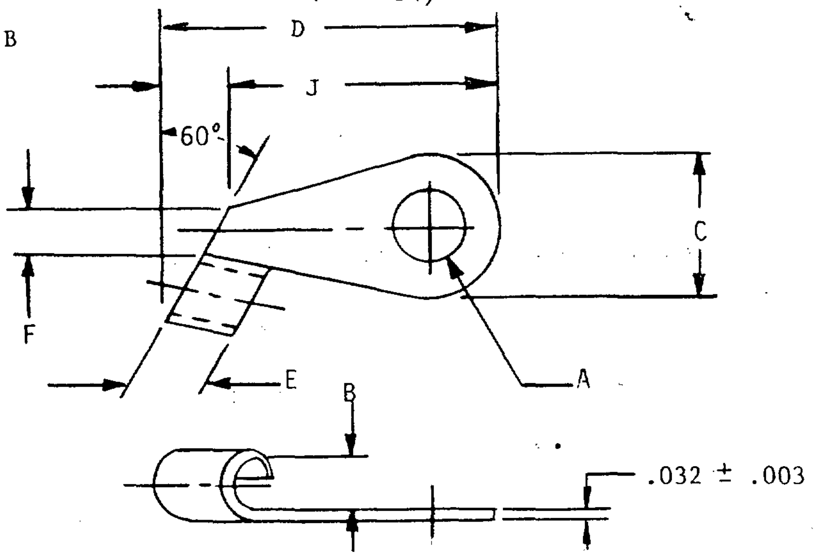

PART NUMBER	WIRE SIZE AWG	STUD SIZE	A HOLE DIA MIN	A HOLE DIA MAX	B	C	D	E	F	J	K
MS35434-12	8	10	.193	.205	.125	.375	.937	.187	.125	.562	.188

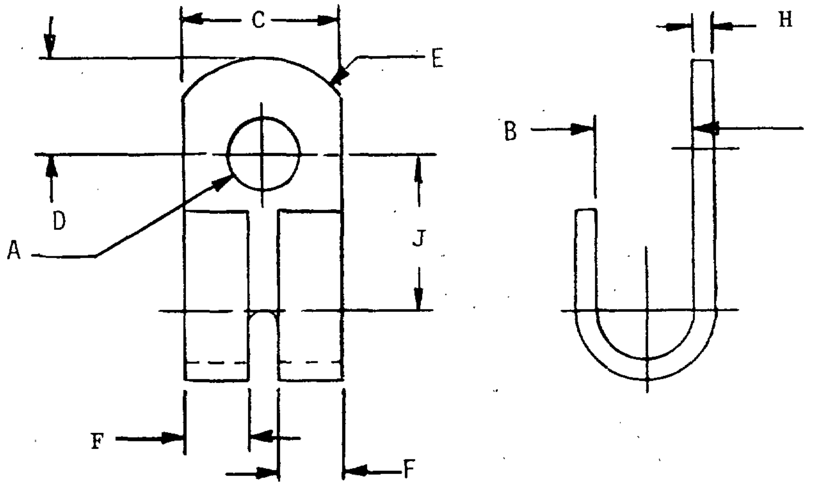

PART NUMBER	WIRE SIZE AWG	STUD SIZE	A HOLE DIA MIN	A HOLE DIA MAX	B	C	D	E	F	H	J
MS35434-3	12-16	# 8	.167	.179	.109	.375	.187	.219	.125	.040	.250
MS35434-4	12-16	#10	.193	.205	.109	.375	.187	.375	.125	.040	.375
MS35434-5	12-16	#12	.221	.234	.109	.375	.187	.219	.125	.040	.250
MS35434-6	8-10	#10	.193	.205	.156	.375	.187	.219	.125	.040	.344
MS35434-7	8-10	.250	.258	.258	.156	.625	.375	---	.266	.062	.625
MS35434-8	1	.375	.383	.410	.406	.875	.500	.500	.359	.102	.844
MS35434-9	1	.500	.510	.537	.406	.875	.500	.500	.359	.102	.844
MS35434-10	00-0	.375	.383	.410	.531	.875	.500	.500	.359	.102	.875
MS35434-11	00-0	.500	.510	.537	.469	.875	.500	.500	.359	.102	.875

Downloaded from http://www.everyspec.com

TERMINAL, LUG, SOLDER TYPE,
COPPER STAMPING, INSULATION GRIP, ONE HOLE

(MS35436)

(Applicable Specification: MIL-T-15659)
(Inactive for new design for Air Force use)

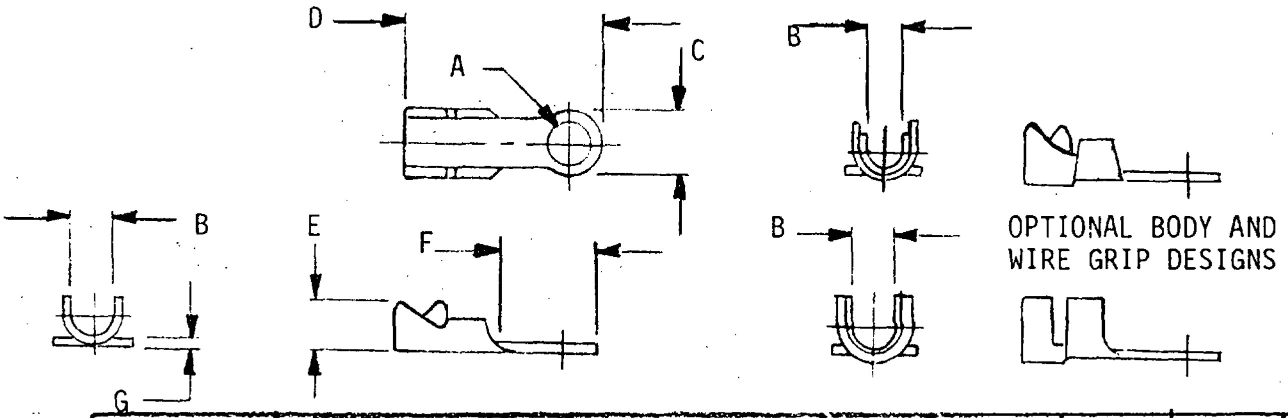

PART NUMBER	WIRE SIZE AWG	STUD SIZE	A HOLE DIA MIN	A HOLE DIA MAX	B	C	D	E	F	G
MS35436-1	18-20	.250	.258	.285	.125	.469	.859	.234	.547	.032
MS35436-2	18-20	.312	.320	.347	.125	.469	.859	.234	.547	.032
MS35436-3	14-16	#4	.115	.127	.187	.281	.891	.312	.391	.032
MS35436-4	14-16	#6	.141	.153	.187	.344	.984	.312	.484	.032
MS35436-5	14-16	#8	.167	.179	.187	.344	.984	.312	.484	.032
MS35436-6	14-16	#10	.193	.205	.187	.344	.984	.312	.484	.032
MS35436-7	14-16	.250	.258	.285	.187	.562	1.156	.312	.656	.032
MS35436-8	14-16	.312	.320	.347	.187	.687	1.375	.312	.844	.032
MS35436-9	14-16	.375	.383	.410	.187	.687	1.375	.312	.844	.032
MS35436-10	10-12	#8	.167	.179	.250	.344	.984	.391	.484	.040
MS35436-11	10-12	#10	.193	.205	.250	.344	.984	.391	.484	.040
MS35436-12	10-12	.250	.258	.285	.250	.562	1.156	.391	.656	.040
MS35436-13	10-12	.312	.320	.347	.250	.687	1.344	.391	.781	.040
MS35436-14	10-12	.375	.383	.410	.250	.687	1.375	.391	.844	.040
MS35436-15	10-12	.437	.448	.475	.250	.687	1.469	.391	.484	.040
MS35436-16	10-12	.500	.510	.537	.250	.812	1.562	.391	1.031	.040
MS35436-17	8	#10	.193	.205	.312	.562	1.406	.453	.594	.045
MS35436-18	8	.250	.258	.285	.312	.562	1.406	.453	.656	.045
MS35436-19	8	.312	.320	.347	.312	.687	1.531	.453	.391	.045
MS35436-20	8	.375	.383	.410	.312	.812	1.625	.453	.906	.045
MS35436-21	8	.437	.448	.475	.312	.812	1.719	.453	1.031	.045
MS35436-22	4-6	#10	.193	.205	.375	.562	1.344	.562	.656	.045
MS35436-23	4-6	.250	.258	.285	.375	.562	1.406	.562	.719	.045
MS35436-24	4-6	.312	.320	.347	.375	.562	1.469	.562	.391	.045
MS35436-25	4-6	.375	.383	.410	.375	.812	1.625	.562	.906	.045
MS35436-26	4-6	.437	.448	.475	.375	.812	1.719	.562	1.031	.045
MS35436-27	4-6	.500	.510	.537	.375	.937	1.812	.562	1.094	.045
MS35436-28	0-1	.375	.383	.410	.437	.937	2.469	.703	---	.102
MS35436-29	0-1	.500	.510	.537	.437	.937	2.469	.703	---	.102

Downloaded from http://www.everyspec.com

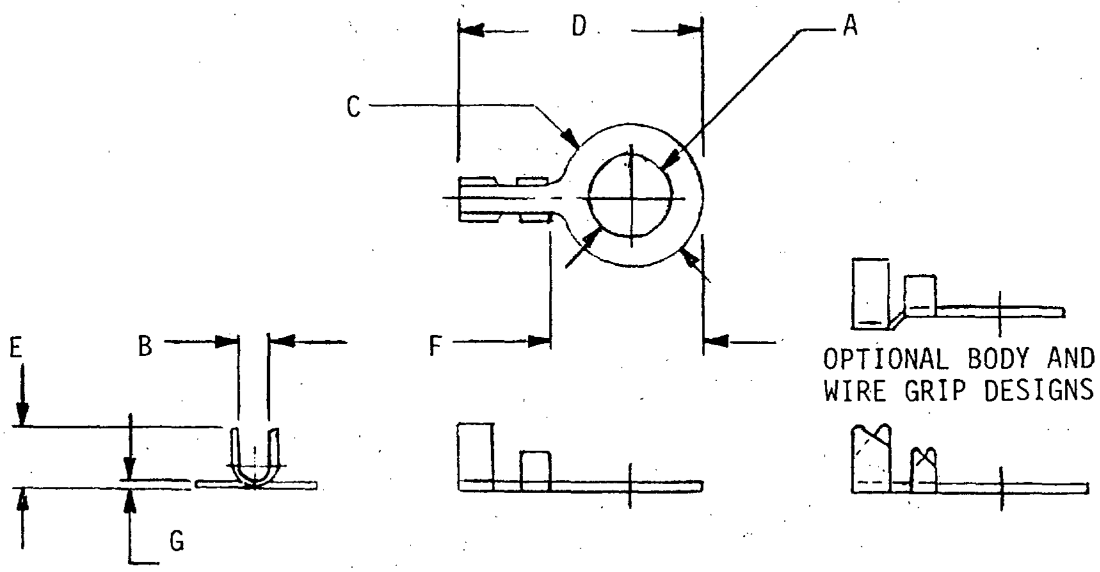

PART NUMBER	WIRE SIZE AWG	STUD SIZE	A HOLE DIA MIN	A HOLE DIA MAX	B	C	D	E	F	G
MS35436-30	10	#6	.141	.153	.125	.281	.656	.218	.328	.032
MS35436-31	8	#6	.141	.153	.156	.344	1.000	.281	.469	.025
MS35436-32	8	#8	.167	.179	.156	.344	1.000	.281	.469	.025
MS35436-33	8	#10	.193	.205	.156	.344	1.000	.281	.469	.025
MS35436-34	8	.375	.383	.410	.156	.687	1.219	.281	.469	.025
MS35436-35	6	#6	.141	.153	.187	.500	1.094	.250	.594	.032
MS35436-36	6	#8	.167	.179	.187	.500	1.094	.250	.594	.032
MS35436-37	6	#10	.193	.205	.187	.500	1.094	.250	.594	.032
MS35436-38	6	.250	.258	.285	.187	.500	1.094	.250	.594	.032
MS35436-39	4	#6	.141	.153	.219	.500	1.094	.344	.594	.040
MS35436-40	4	#8	.167	.179	.219	.500	1.094	.344	.594	.040
MS35436-41	4	#10	.193	.205	.219	.500	1.094	.344	.594	.040
MS35436-42	4	#12	.221	.236	.219	.500	1.094	.344	.594	.040
MS35436-43	4	.250	.258	.285	.219	.500	1.094	.344	.594	.040

Downloaded from http://www.everyspec.com

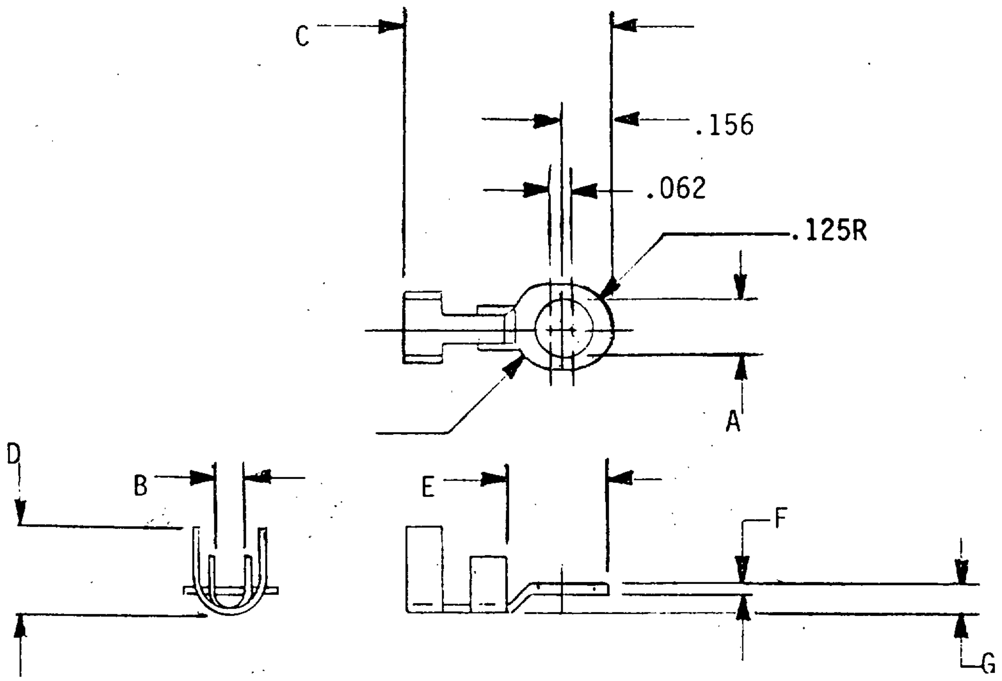

PART NUMBER	WIRE SIZE AWG	STUD SIZE	A HOLE DIA MIN	A HOLE DIA MAX	B	C	D	E	F	G
MS35436-44	12	6	.141	.153	.094	.687	.281	.344	.030	.078

Downloaded from http://www.everyspec.com

TERMINAL, LUG, SOLDER TYPE, COPPER STAMPING, INSULATION GRIP, ONE HOLE, FLAG

(MS35438)

(Applicable Specification: MIL-T-15659)
(Inactive for new design for Air Force use)

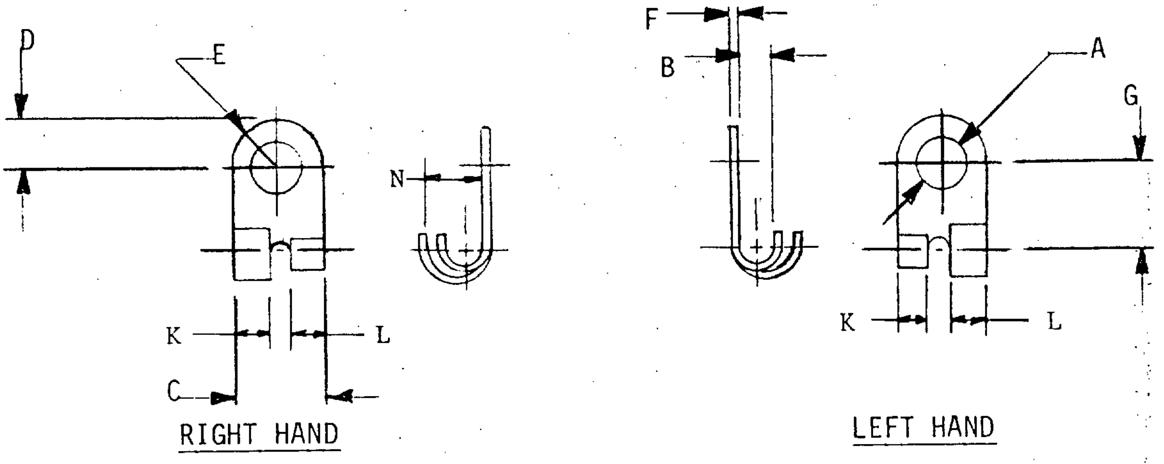

RIGHT HAND PART NUMBER	LEFT HAND PART NUMBER	WIRE SIZE AWG	STUD SIZE	A HOLE DIA MIN	A HOLE DIA MAX	B	C	D	E RAD	F ±.003	G	K	L	N
MS35438-1	MS35438-29	16	#6	.141	.153	.062	.312	.141	.172	.032	.344	.125	.125	.109
MS35438-2	MS35438-30	16	#8	.167	.179	.062	.375	.187	.219	.032	.203	.125	.156	.109
MS35438-3	MS35438-31	14-16	#8	.167	.179	.062	.312	.156	.187	.022	.344	.125	.125	.125
MS35438-4	MS35438-32	14-16	#10	.193	.205	.062	.312	.156	.187	.022	.344	.125	.125	.125
MS35438-5	MS35438-33	14-16	#10	.193	.205	.078	.375	.187	.187	.032	.406	.125	.188	.156
MS35438-6	MS35438-34	14-16	.250	.258	.285	.078	.375	.187	.375	.032	.406	.125	.188	.156
MS35438-7	MS35438-35	14-16	.312	.320	.347	.087	.625	.312	.375	.040	.500	.250	.281	.156
MS35438-8	MS35438-36	14-16	.375	.363	.410	.078	.625	.312	.375	.040	.500	.250	.281	.156
MS35438-9	MS35438-37	12-14	#8	.167	.179	.094	.375	.187	.219	.032	.281	.125	.156	.172
MS35438-10	MS35438-38	12-14	#10	.193	.205	.094	.375	.187	.219	.032	.281	.125	.156	.172
MS35438-11	MS35438-39	10-12	#10	.193	.205	.125	.375	.187	.219	.040	.344	.125	.156	.219
MS35438-12	MS35438-40	10-12	#10	.193	.205	.125	.625	.312	.625	.040	.562	.250	.281	.219
MS35438-13	MS35438-41	10-12	.250	.258	.265	.125	.625	.312	.625	.040	.562	.250	.281	.219
MS35438-14	MS35438-42	10-12	.312	.320	.347	.125	.625	.312	.625	.040	.562	.250	.281	.219
MS35438-15	MS35438-43	8	#10	.193	.205	.172	.375	.187	.375	.040	.375	.125	.156	.250
MS35438-16	MS35438-44	8	.375	.363	.410	.156	.750	.375	.437	.045	.687	.312	.344	.312
MS35438-17	MS35438-45	8	.500	.510	.537	.156	.750	.375	.437	.045	.687	.312	.344	.312
MS35438-18	MS35438-46	6-8	#10	.193	.20P	.219	.625	.312	.375	.045	.562	.250	.281	.281
MS35438-19	MS35438-47	6-8	#12	.221	.236	.219	.625	.312	.375	.045	.562	.250	.281	.281
MS35438-20	MS35438-48	6-8	.250	.258	.265	.219	.625	.312	.375	.045	.562	.250	.281	.281
MS35438-21	MS35438-49	6-8	.312	.320	.347	.219	.625	.312	.375	.045	.562	.250	.281	.281
MS35438-22	MS35438-50	6-8	.312	.320	.347	.219	.750	.375	.750	.045	.719	.312	.344	.312
MS35438-23	MS35438-51	6-8	.375	.363	.410	.219	.750	.375	.750	.045	.719	.312	.344	.312
MS35438-24	MS35438-52	2	.250	.258	.265	.156	.625	.250	.625	.057	.750	.250	.281	.266
MS35438-25	MS35438-53	2	.375	.363	.410	.156	.625	.312	.625	.057	.687	.250	.281	.266
MS35438-26	MS35438-54	2	.312	.320	.347	.156	.625	.312	.625	.057	.687	.250	.281	.266
MS35438-27	MS35438-55	2	.500	.510	.537	.156	.875	.437	.875	.057	.812	.320	.391	.266
MS35438-28	MS35438-56	1	.375	.383	.410	.187	.875	.437	.437	.091	.812	.320	.391	.297

Downloaded from http://www.everyspec.com

TERMINAL, LUG, SOLDER TYPE,
COPPER STAMPING, INSULATION GRIP, SLOTTED

(MS35440)

(Applicable Specification: MIL-T-15659)

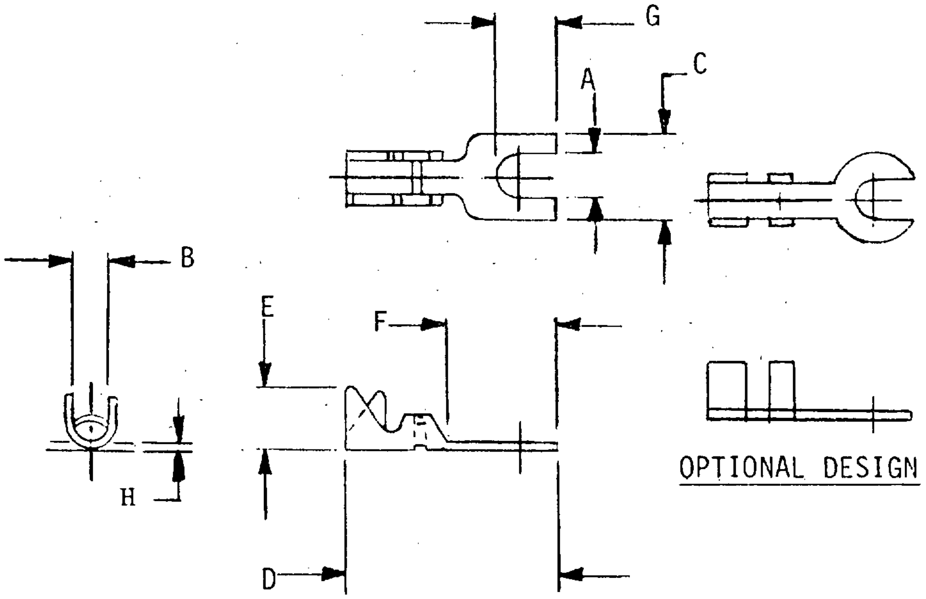

PART NUMBER	WIRE SIZE AWG	STUD SIZE	A		B	C	D	E	F	G	H
			MIN	MAX							
MS35440-1	12	10	.193	.205	.156	.406	1.031	.344	.500	.312	.032
MS35440-2	12	10	.193	.205	.187	.437	1.062	.297	.562	.312	.032
MS35440-3	10	6	.141	.153	.109	.312	.625	.125	.344	---	.025
MS35440-4	8	10	.193	.205	.141	.500	.937	.187	.500	.344	.025

Downloaded from http://www.everyspec.com

TERMINAL, LUG, SOLDER TYPE, COPPER STAMPING, TWO HOLE

(MS35444)

(Applicable Specification: MIL-T-15659)

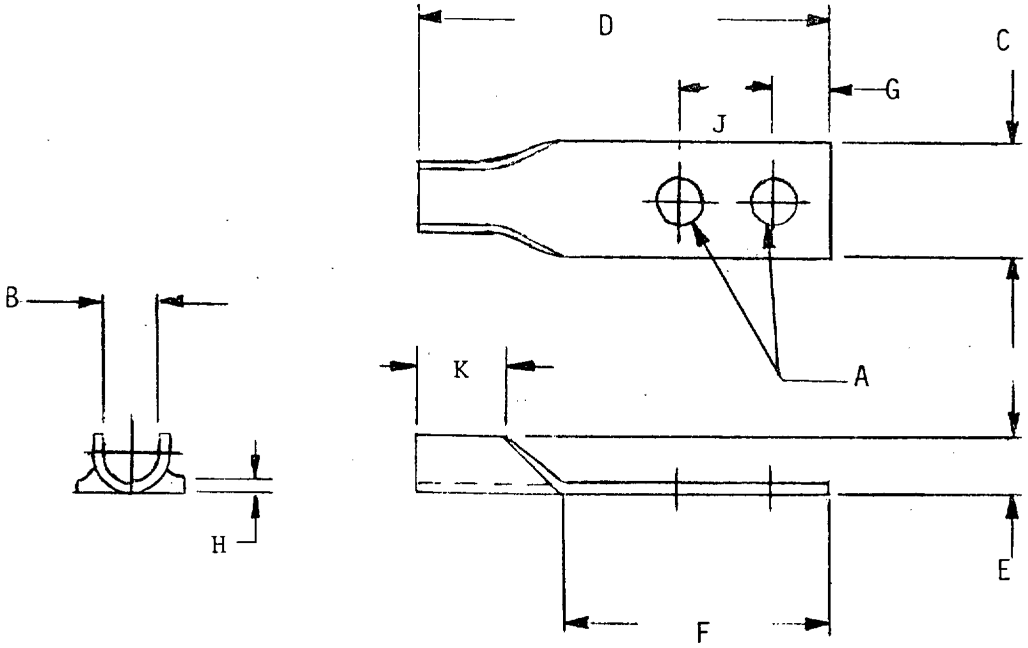

PART NUMBER	WIRE SIZE AWG	STUD SIZE	A HOLE DIA MIN	A HOLE DIA MAX	B	C	D	E	F	G
MS35444-1	10	8	.167	.179	.187	.375	2.250	.187	1.750	.187
MS35444-2	10	10	.193	.205	.187	.375	1.375	.187	.875	.187
MS35444-3	10	10	.193	.205	.187	.375	1.625	.187	1.125	.187
MS35444-4	10	10	.193	.205	.187	.375	1.500	.187	1.000	.312

PART NUMBER	H ± .003	J	K
MS35444-1	.032	.875	.250
MS35444-2	.032	.312	.250
MS35444-3	.032	.500	.250
MS35444-4	.032	.312	.250

Downloaded from http://www.everyspec.com

TERMINAL, LUG, SOLDER TYPE, COPPER TUBING, ONE HOLE

(MS35446)

(Applicable Specification: MIL-T-15659)

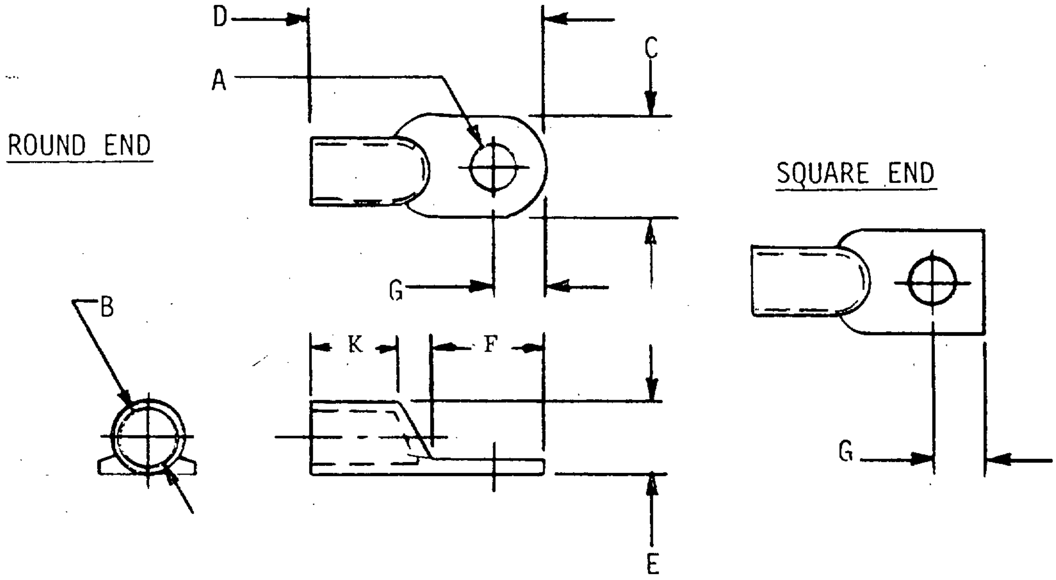

ROUND END PART NUMBER	SQUARE END PART NUMBER	WIRE SIZE AWG	STUD SIZE	A * HOLE DIA MIN	MAX	B	C	D	E	F	G	K
MS35446-1	MS35446-11	10	#8	.167	.179	.143	.250	.937	.187	.469	.187	.344
MS35446-2	MS35446-12	8	#10	.193	.205	.186	.375	1.031	.250	.500	.219	.344
MS35446-3	MS35446-13	6	#10	.193	.205	.238	.437	1.219	.312	.594	.250	.375
MS35446-4	MS35446-14	4	.250	.258	.285	.269	.531	1.375	.375	.687	.281	.438
MS35446-5	MS35446-15	2	.250	.258	.285	.347	.625	1.500	.437	.750	.344	.500
MS35446-6	MS35446-16	0	.312	.320	.347	.401	.750	1.750	.500	.812	.406	.562
MS35446-7	MS35446-17	00	.375	.383	.410	.460	.812	2.000	.562	.937	.437	.688
MS35446-8	MS35446-18	000	.375	.383	.410	.519	.906	2.125	.625	1.000	.500	.781
MS35446-9	MS35446-19	0000	.375	.383	.410	.559	1.000	2.375	.687	1.156	.531	.844
MS35446-10	MS35446-20	250MCM	.375	.383	.410	.660	1.185	2.641	.812	1.250	.625	.969
MS35446-21	MS35446-28	150MCM	.500	.510	.537	.651	1.185	2.625	.812	1.250	.625	
MS35446-22	MS35446-29	200MCM	.500	.510	.537	.776	1.391	3.125	.937	1.687	.750	
MS35446-23	MS35446-30	300MCM	.500	.510	.537	.820	1.500	3.437	1.000	1.750	.812	
MS35446-24	MS35446-31	400MCM	---	.056	---	.881	1.562	4.156	1.062	2.094	.937	
MS35446-25	MS35446-32	500MCM	---	.056	---	.944	1.672	4.469	1.125	2.219	.937	
MS35446-26	MS35446-33	650MCM	---	.781	---	1.084	1.969	5.062	1.312	2.500	1.125	
MS35446-27	MS35446-34	800MCM	---	.906	---	1.210	2.125	5.375	1.437	2.500	1.125	

*TERMINAL LUG STUD HOLE DIMENSIONS FOR DASH NUMBERS 21 THROUGH 34 ARE NORMAL UNLESS SPECIFIED OTHERWISE.

Downloaded from http://www.everyspec.com

TERMINAL, LUG, SOLDER TYPE,
COPPER TUBING, ONE HOLE, 45 DEGREES

(MS35447)

(Applicable Specification: MIL-T-15659)

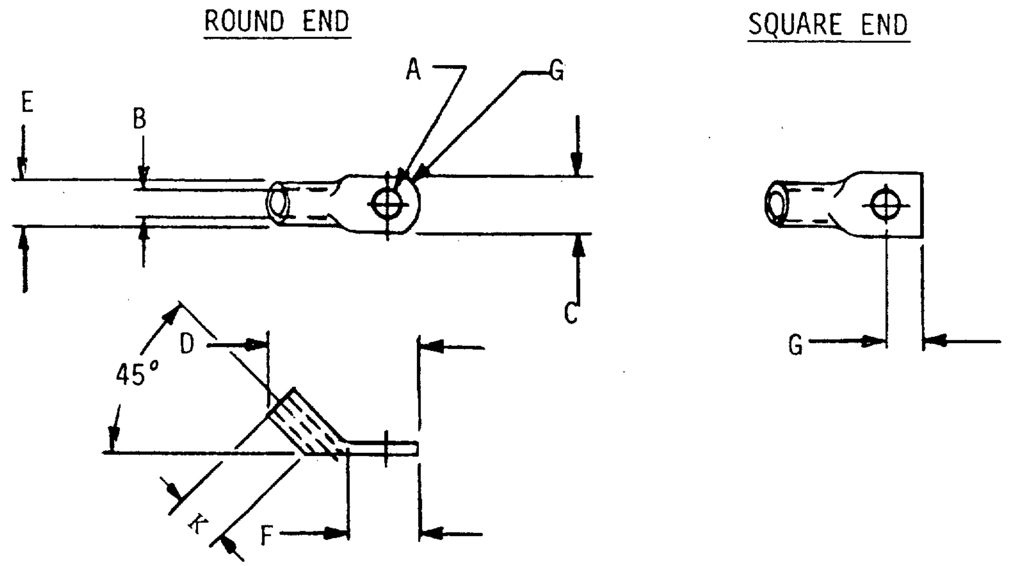

ROUND END PART NUMBER	SQUARE END PART NUMBER	WIRE SIZE AWG	STUD SIZE	A HOLE DIA MIN	A HOLE DIA MAX	B	C	D	E	F	G	K
MS35447-1	MS35447-11	10	#8	.167	.179	.143	.250	.812	.187	.469	.187	.344
MS35447-2	MS35447-12	8	#10	.193	.205	.186	.375	1.125	.250	.500	.219	.344
MS35447-3	MS35447-13	6	#10	.193	.205	.238	.437	1.187	.312	.594	.250	.375
MS35447-4	MS35447-14	4	.250	.258	.285	.289	.531	1.137	.375	.687	.281	.438
MS35447-5	MS35447-15	2	.250	.258	.285	.347	.375	1.562	.437	.750	.344	.500
MS35447-6	MS35447-16	0	.312	.320	.347	.401	.750	1.750	.500	.812	.406	.562
MS35447-7	MS35447-17	00	.375	.383	.410	.460	.812	1.937	.562	.937	.437	.688
MS35447-8	MS35447-18	000	.375	.383	.410	.519	.906	2.187	.625	1.000	.500	.781
MS35447-9	MS35447-19	0000	.375	.383	.410	.559	1.000	2.437	.687	1.156	.531	.844
MS35447-10	MS35447-20	250MCM	.375	.383	.410	.660	1.187	2.875	.812	1.250	.625	.969

Downloaded from http://www.everyspec.com

TERMINAL, LUG, SOLDER TYPE, COPPER TUBING, ONE HOLE, 90 DEGREES

(MS35448)

(Applicable Specification: MIL-T-15659)

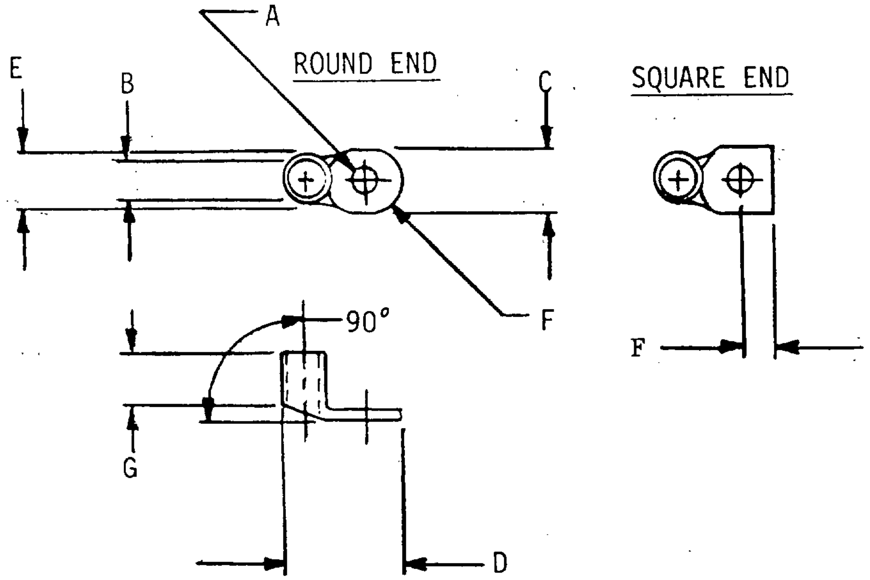

ROUND END PART NUMBER	SQUARE END PART NUMBER	WIRE SIZE AWG	STUD SIZE	A HOLE DIA MIN	A HOLE DIA MAX	B DIA	C	D	E DIA	F	G
MS35448-1	MS35448-11	10	#8	.167	.179	.143	.250	.625	.187	.187	.344
MS35448-2	MS35448-12	8	#10	.193	.205	.186	.375	.812	.250	.219	.344
MS35448-3	MS35448-13	6	#10	.193	.205	.238	.437	.937	.312	.250	.375
MS35448-4	MS35448-14	4	.250	.258	.285	.269	.531	1.125	.375	.281	.438
MS35448-5	MS35448-15	2	.250	.258	.285	.347	.625	1.129	.437	.344	.500
MS35448-6	MS35448-16	0	.312	.320	.347	.401	.750	1.375	.500	.406	.562
MS35448-7	MS35448-17	00	.375	.383	.410	.460	.812	1.562	.562	.437	.688
MS35448-8	MS35448-18	000	.375	.383	.410	.519	.906	1.687	.625	.500	.781
MS35448-9	MS35448-19	0000	.375	.383	.410	.559	1.000	1.875	.687	.531	.844
MS35448-10	MS35448-20	250MCM	.375	.383	.410	.660	1.187	2.125	.812	.625	.969

Downloaded from http://www.everyspec.com

TERMINAL, LUG, SOLDER TYPE,
COPPER TUBING, TWO HOLE

(MS35449)

(Applicable Specification: MIL-T-15659)

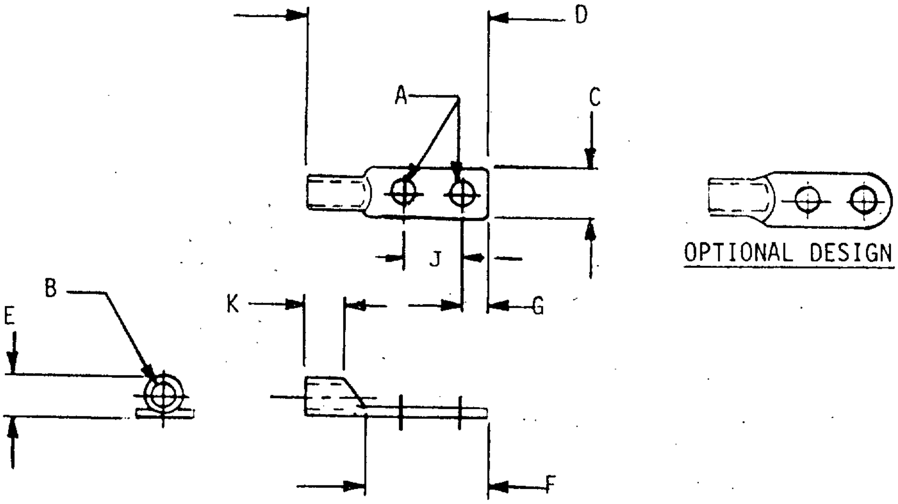

PART NUMBER	WIRE SIZE AWG	STUD SIZE	A HOLE DIA MIN	A HOLE DIA MAX	B	C	D	E	F	G	J	K
MS35449-1	10	#6	.141	.153	.143	.250	1.219	.187	.750	.156	.375	.344
MS35449-2	8	#8	.167	.179	.186	.375	1.406	.250	.875	.187	.438	.344
MS35449-3	6	#10	.193	.205	.238	.437	1.750	.312	1.062	.250	.500	.375
MS35449-4	4	#12	.221	.236	.289	.531	1.906	.375	1.250	.312	.625	.438
MS35449-5	2	.250	.258	.265	.347	.625	2.125	.437	1.375	.312	.688	.500
MS35449-6	0	.312	.320	.347	.401	.750	2.625	.500	1.687	.375	.875	.562
MS35449-7	00	.375	.363	.410	.460	.812	3.062	.562	2.000	.437	1.000	.687
MS35449-8	000	.375	.363	.410	.519	.906	3.125	.625	2.000	.437	1.000	.781
MS35449-9	0000	.375	.363	.410	.559	.969	3.250	.687	2.125	.500	1.000	.844
MS35449-10	250MCM	.500	.510	.537	.660	1.187	4.000	.812	2.625	.625	1.000	.969

Downloaded from http://www.everyspec.com

TERMINAL, LUG, SOLDER TYPE,
PHOSPHOR BRONZE STAMPING,
LOCKING TYPE, 30 DEGREES, ONE HOLE

(MS77066)

(Applicable Specification: MIL-T-15659)

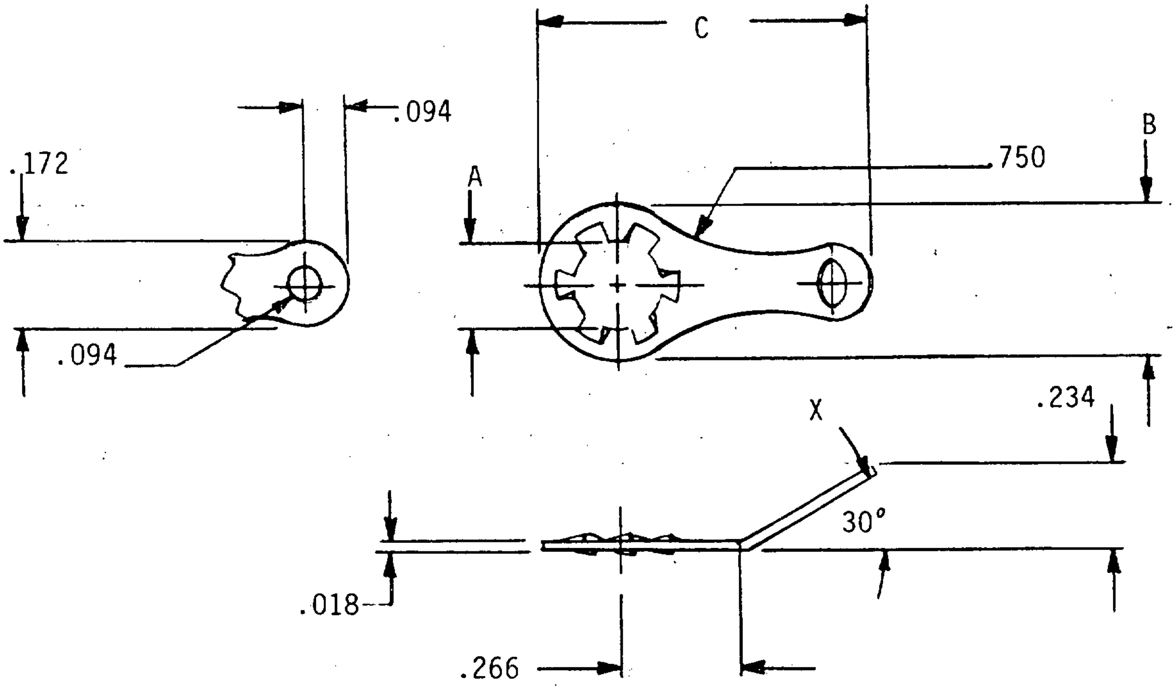

PART NUMBER	SCREW SIZE	A HOLE DIA MIN	A HOLE DIA MAX	B	C	AWG SIZE
MS77066-1	4	.127	.115	.312	.812	12-20
MS77066-2	6	.153	.141	.312	.812	12-20
MS77066-3	8	.179	.167	.312	.812	12-20
MS77066-4	10	.205	.193	.344	.828	12-20

Downloaded from http://www.everyspec.com

TERMINAL, LUG, SOLDER TYPE,
PHOSPHOR BRONZE STAMPING,
LOCKING TYPE, FLAT, TWO HOLE

(MS77067)

(Applicable Specification: MIL-T-15659)

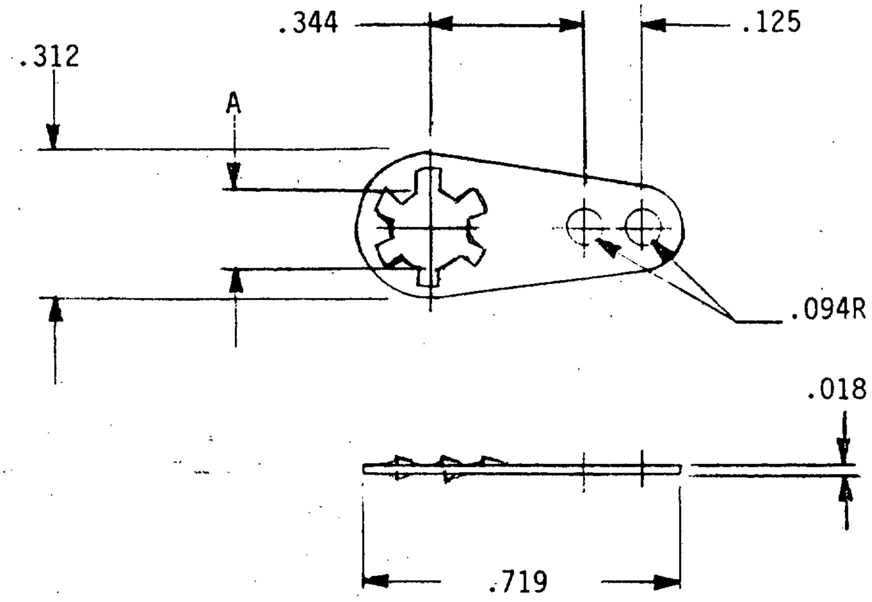

PART NUMBER	SCREW SIZE	A HOLE DIA MIN	A HOLE DIA MAX	AWG SIZE
MS77067-1	4	.127	.115	12-20
MS77067-2	6	.153	.141	12-20
MS77067-3	8	.179	.167	12-20

Downloaded from http://www.everyspec.com

TERMINAL, LUG, SOLDER TYPE,
PHOSPHOR BRONZE STAMPING,
LOCKING TYPE, 45 DEGREE, TWO HOLES

(MS77068)

(Applicable Specification: MIL-T-15659)

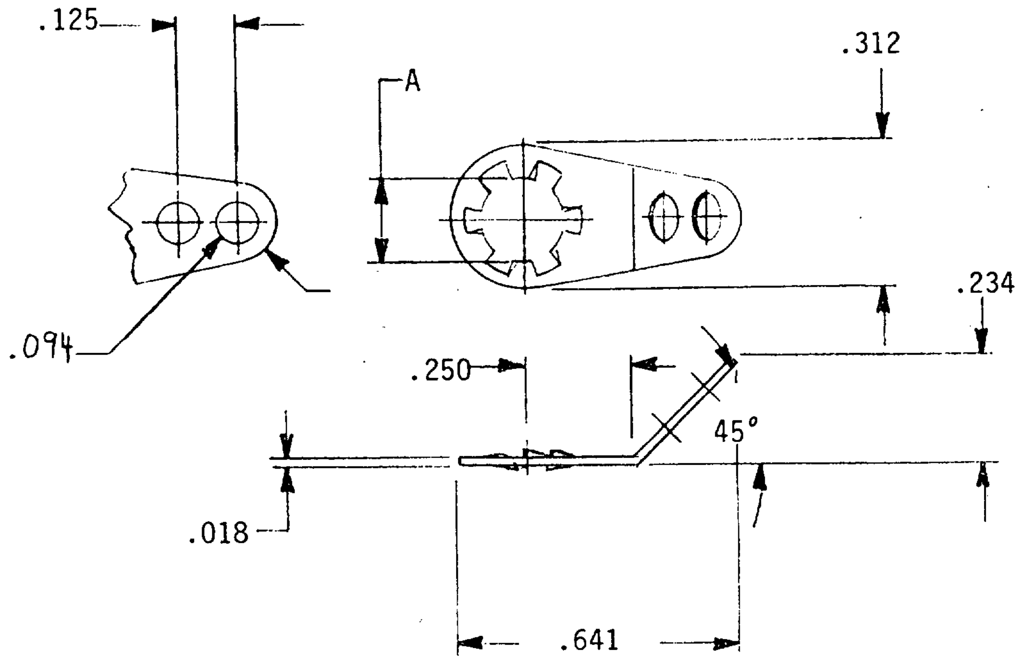

PART NUMBER	SCREW SIZE	A HOLE DIA MIN	A HOLE DIA MAX	AWG SIZE
MS77068-1	4	.127	.115	12-20
MS77068-2	6	.153	.141	12-20
MS77068-3	8	.179	.167	12-20
MS77068-4	10	.205	.193	12-20

Downloaded from http://www.everyspec.com

TERMINAL, LUG, SOLDER TYPE,
PHOSPHOR BRONZE STAMPING,
LOCKING TYPE, 30 DEGREES, ONE HOLE

(MS77069)

(Applicable Specification: MIL-T-15659)

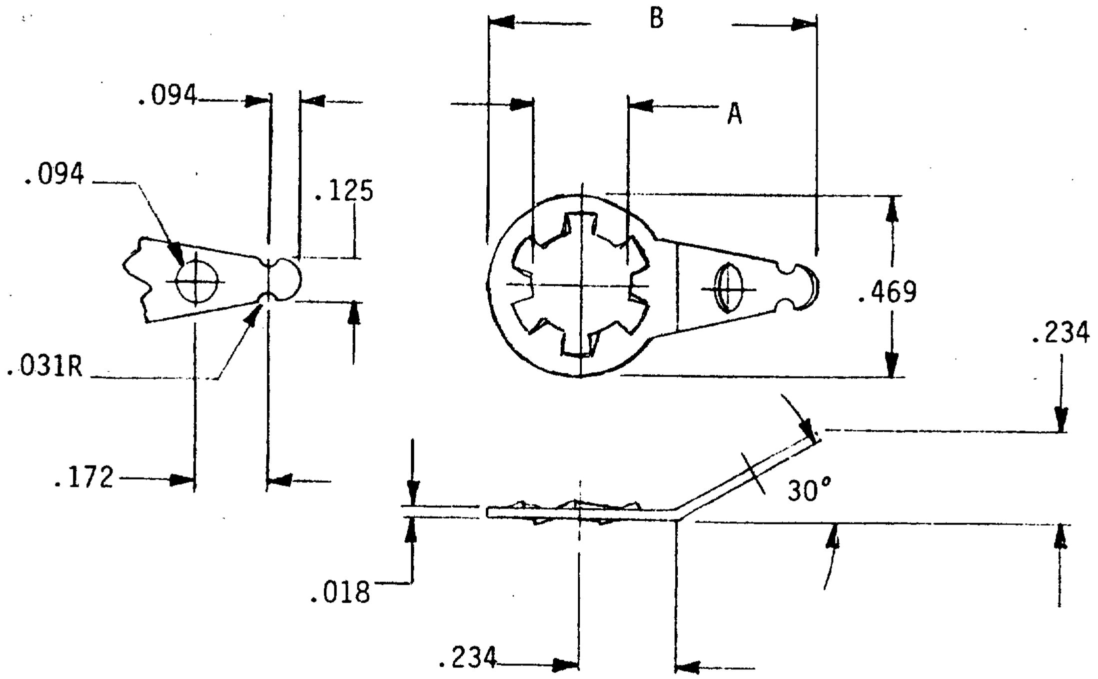

PART NUMBER	SCREW SIZE	A HOLE DIA MIN	A HOLE DIA MAX	B	AWG SIZE
MS77069-1	#10	.205	.193	.844	12-20
MS77069-2	#12	.236	.221	.844	12-20
MS77069-3	.250	.285	.258	.859	12-20

Downloaded from http://www.everyspec.com

TERMINAL, LUG, SOLDER TYPE,
PHOSPHOR BRONZE STAMPING,
LOCKING TYPE, FLAT, ONE HOLE

(MS77070)

(Applicable Specification: MIL-T-15659)

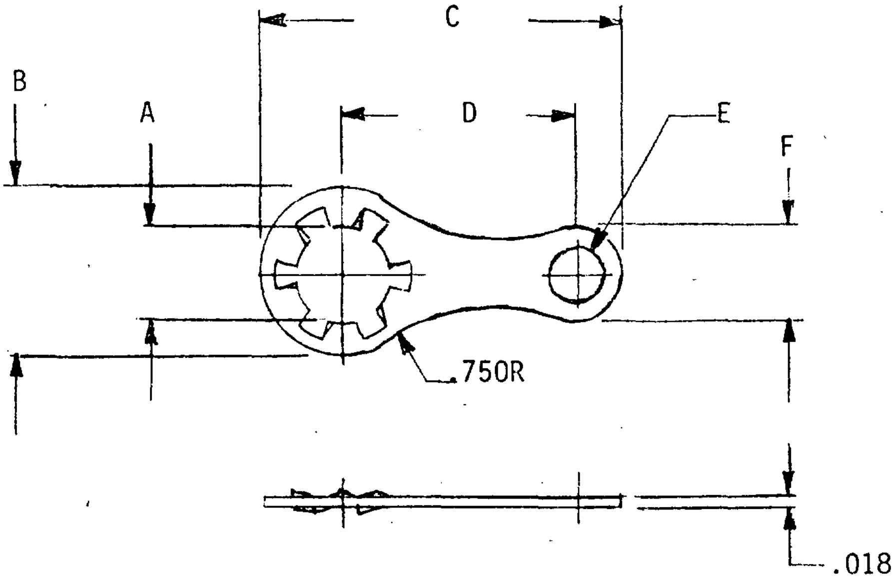

PART NUMBER	SCREW SIZE	A HOLE DIA MIN	A HOLE DIA MAX	B	C	D	E	F	AWG SIZE
MS77070-1	4	.127	.115	.312	.875	.625	.094	.172	12-20
MS77070-2	6	.153	.141	.312	.875	.625	.094	.172	12-20
MS77070-3	8	.179	.167	.312	.875	.625	.094	.172	12-20
MS77070-4	10	.205	.193	.437	.656	.375	.062	.125	16-20
MS77070-5	10	.205	.193	.344	.891	.625	.094	.172	12-20

Downloaded from http://www.everyspec.com

TERMINAL, LUG, SOLDER TYPE,
PHOSPHOR BRONZE STAMPING,
LOCKING TYPE, 90 DEGREES, ONE HOLE

(MS77071)

(Applicable Specification: MIL-T-15659)

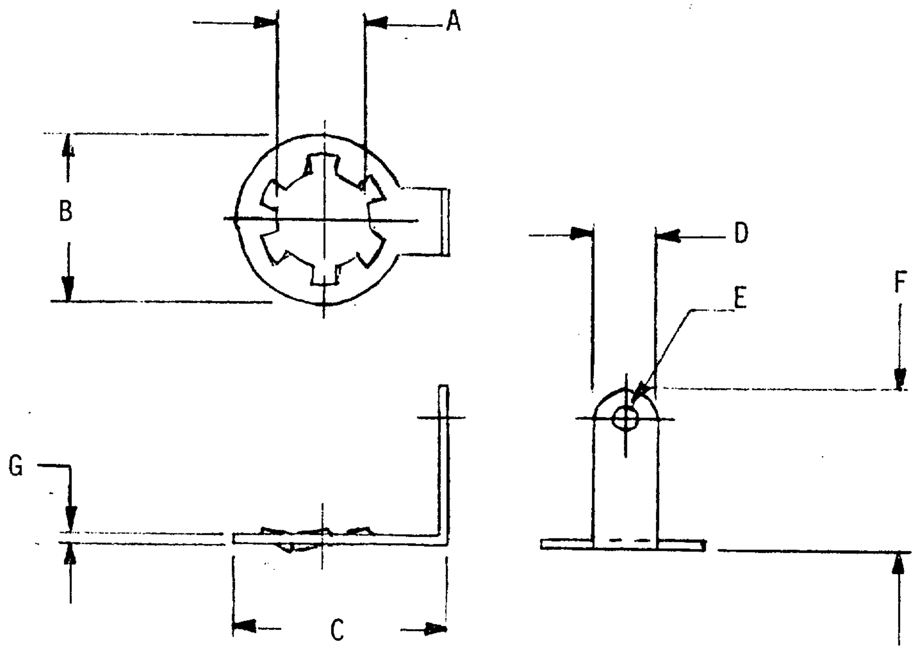

PART NUMBER	SCREW SIZE	A HOLE DIA MIN	A HOLE DIA MAX	B	C	D	E	F	G	AWG SIZE
MS77071-1	4	.127	.115	.312	.406	.156	.094	.312	.013	12-20
MS77071-2	6	.153	.141	.250	.344	.125	.078	.375	.020	12-20

Downloaded from http://www.everyspec.com

TERMINAL, LUG, SOLDER TYPE,
PHOSPHOR BRONZE STAMPING,
LOCKING TYPE, FLAT, ONE HOLE

(MS77072)

(Applicable Specification: MIL-T-15659)

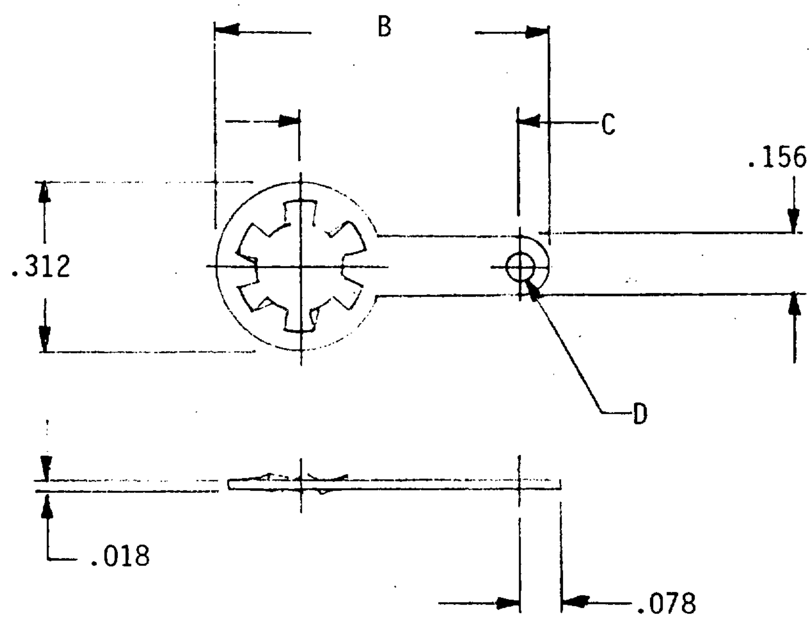

PART NUMBER	SCREW SIZE	A HOLE DIA MIN	A HOLE DIA MAX	B	C	D	AWG SIZE
MS77072-1	4	.127	.115	.734	.500	.094	12-20
MS77072-2	6	.153	.141	.734	.500	.094	12-20
MS77072-3	6	.153	.141	.484	.250	.078	14-20
MS77072-4	8	.179	.167	.734	.500	.094	12-20

Downloaded from http://www.everyspec.com

TERMINAL, LUG, SOLDER TYPE,
PHOSPHOR BRONZE STAMPING,
INSULATION GRIP, LOCKING TYPE

(MS77074)

(Applicable Specification: MIL-T-15659)

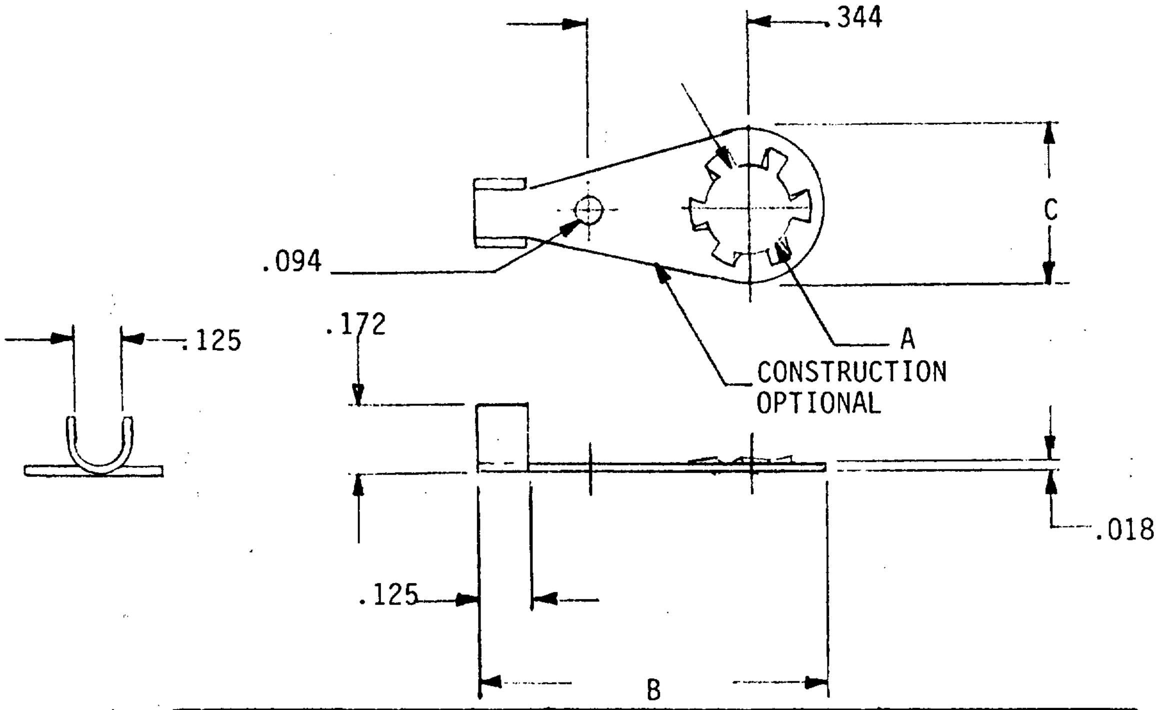

PART NUMBER	SCREW SIZE	A HOLE DIA MIN	A HOLE DIA MAX	B	C	AWG SIZE
MS77074-1	#4	.115	.127	.781	.312	12-20
MS77074-2	#6	.141	.153	.781	.312	12-20
MS77074-3	#8	.167	.179	.781	.312	12-20
MS77074-4	#10	.193	.205	.781	.312	12-20
MS77074-5	#8	.167	.179	.875	.500	12-20
MS77074-6	#10	.193	.205	.875	.500	12-20
MS77074-7	.250	.258	.285	.875	.500	12-20

Downloaded from http://www.everyspec.com

SECTION 300

TERMINALS, FEEDTHRU

Section		Applicable document
301	Terminals, Feedthru (Insulated)	MIL-T-55155

Downloaded from http://www.everyspec.com

(This page left blank)

Downloaded from http://www.everyspec.com

SECTION 301

TERMINALS, FEEDTHRU (INSULATED)
STYLE FT01

MIL-T-55155/1

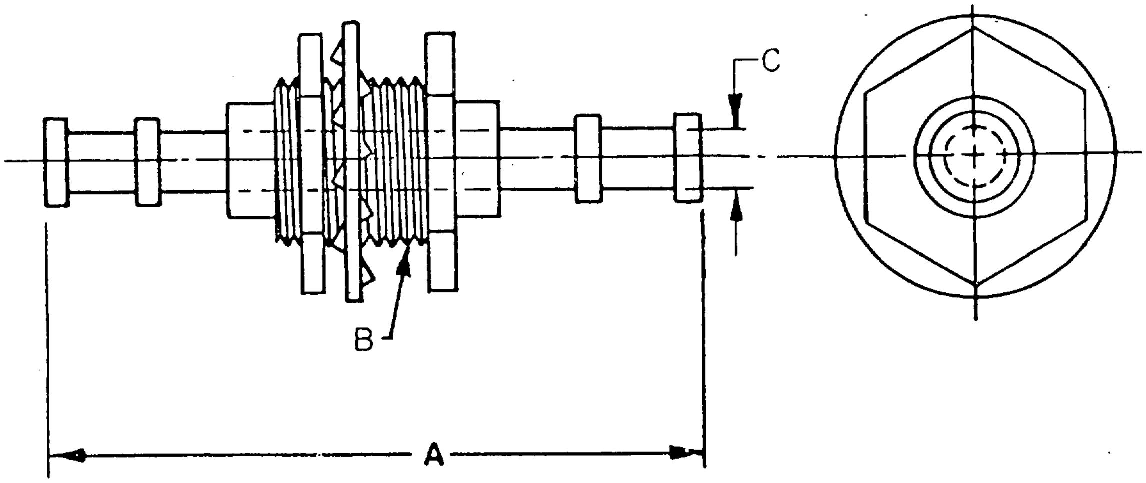

Type designation 1/	Dielectric withstanding voltage, ac(rms)	Dimensions		
		A	B	C
FT01-A01	1250	.923 (23.44)	1/4 - 28 UNF - 2A	.043 (1.09)
FT01-A02	1500	1.307 (33.20)	3/8 - 32 UNEF- 2A	.050 (1.27)

1/ Dash in type designation allows for different insulation colors in accordance with MIL-T-55155.

Downloaded from http://www.everyspec.com

TERMINALS, FEEDTHRU (INSULATED), STYLE FT02

MIL-T-55155/2

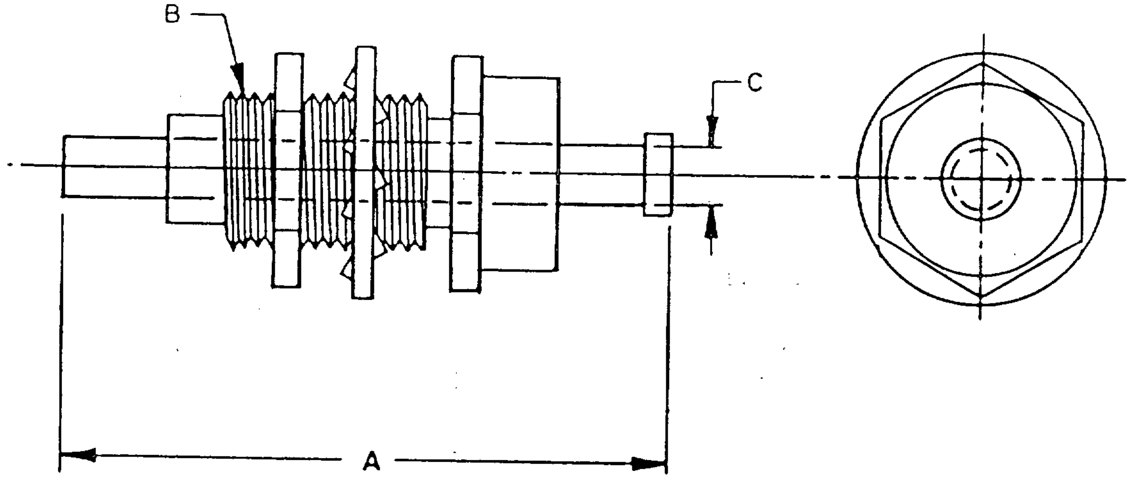

Type designation 1/	Dielectric withstanding voltage, ac (rms)	Dimensions		
		A	B	C
FT02-A01	2000	.690 (17.53)	12 - 28 UNF - 2A	.062 (1.57)

1/ Dash in type designation allows for different insulation colors in accordance with MIL-T-55155.

Downloaded from http://www.everyspec.com

TERMINALS, FEEDTHRU (INSULATED)
STYLE FT03

MIL-T-55155/3

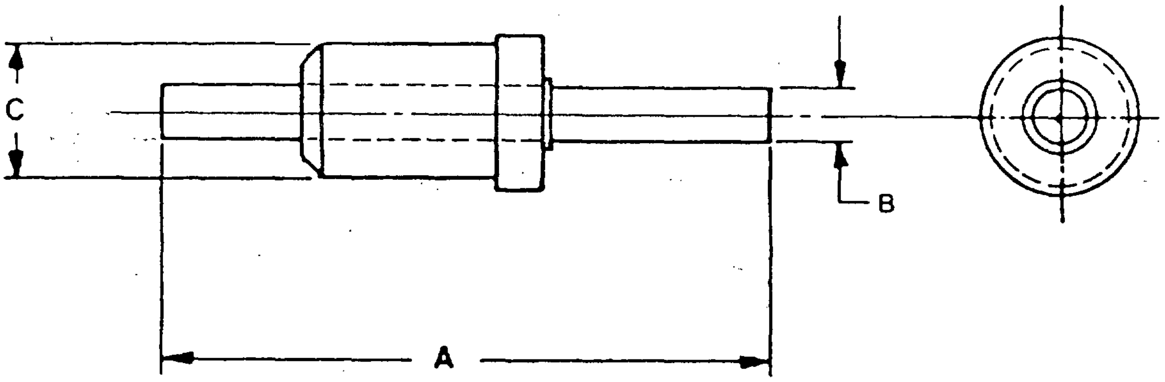

Type designation 1/	Dielectric withstanding voltage, ac (rms)	Dimensions		
		A	B	C
FT03-B01	2000	.375(9.53)	.040(1.02)	.148(3.76)
FT03-B02	2000	.515(13.08)	.040(1.02)	.148(3.76)
FT03-B03	2500	.675(17.15)	.040(1.02)	.165(4.19)
FT03-B04	1500	.515(13.08)	.040(1.02)	.093(2.36)
FT03-B05	1500	.343(8.71)	.040(1.02)	.093(2.36)

1/ Dash in type designation allows for different insulation colors in accordance with MIL-T-55155.

Downloaded from http://www.everyspec.com

TERMINALS, FEEDTHRU (INSULATED)
STYLE FT04

MIL-T-55155/4

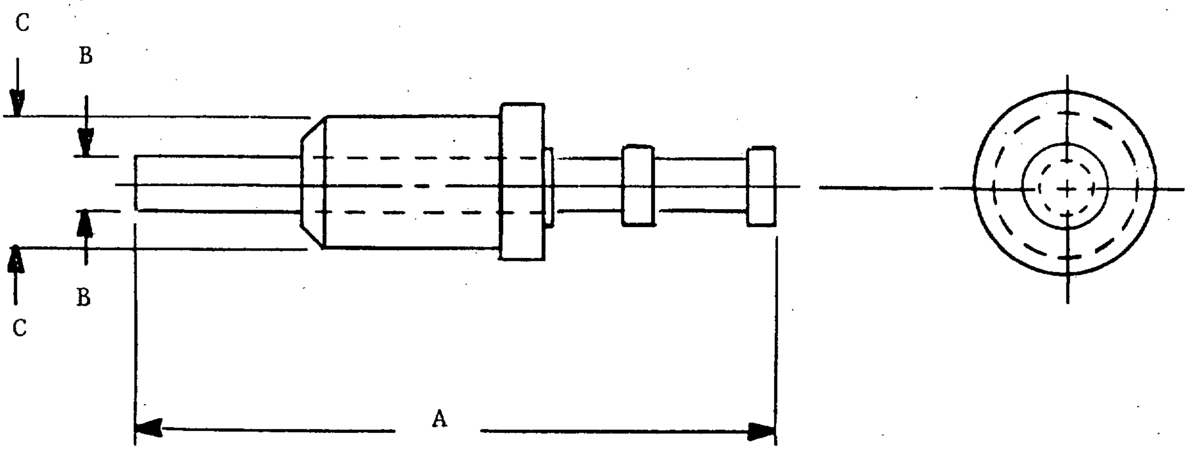

Type designation 1/	Dielectric withstanding voltage, ac(rms)	Dimensions		
		A	B	C
FT04-B01	1500	.500(12.70)	.040(1.02)	.148(3.76)
FT04-B02	3000	.836(21.23)	.040(1.02)	.148(3.76)
FT04-B03	1500	.500(12.70)	.040(1.02)	.093(2.36)

1/ Dash in type designation allows for different insulation colors in accordance with MIL-T-55155.

Downloaded from http://www.everyspec.com

TERMINALS, FEED THRU (INSULATED)

STYLE FT Ø5

APPLICABLE SPECIFICATION: MIL-T-55155/5)

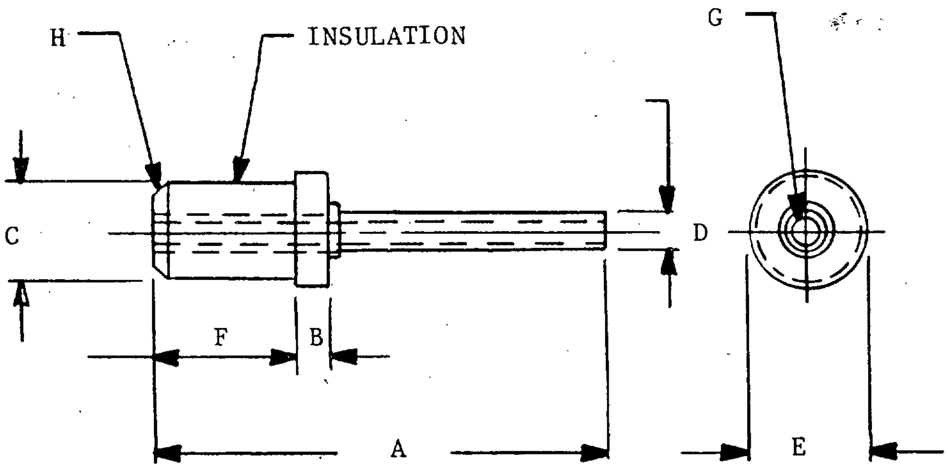

INCHES	MM
.002	.05
.010	.25
.015	.38
.030	.76
.040	1.02
.050	1.27
.053	1.35
.060	1.52
.063	1.60
.085	2.16
.093	2.38
.120	3.05
.125	3.18
.130	3.30
.138	3.51
.172	4.37
.225	5.72
.310	7.87
.367	9.32

	Dimensions							
Type Designation	A	B	C +.002 -.000	D	E	F	G	H
FT05-B01	.225	.040	.093	.040	.125	.060	.030	.010 x 45°
FT05-B02	.310	.050	.120		.130	.053		.015 x 45°
FT05-B03	.367		.148	.085	.172	.110	.063	

Downloaded from http://www.everyspec.com

MIL-T-55155/5

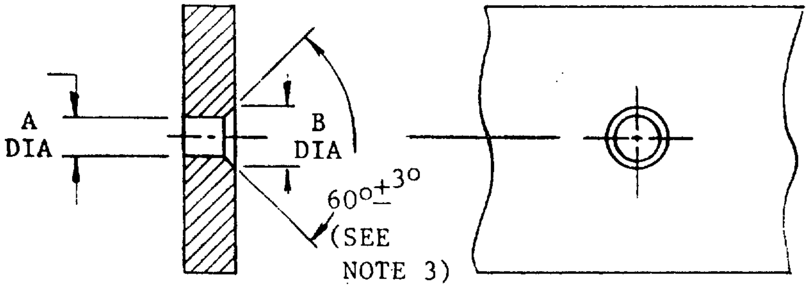

INCHES	MM	INCHES	MM	INCHES	MM
.081	2.06	.110	2.79	.135	3.43
.088	2.24	.115	2.92	.138	3.51
.105	2.67	.130	3.30	.160	4.06
.109	2.77	.134	3.40	.165	4.19

Type Designation	Dimensions			
	A		B	
	MAX	MIN	MAX	MIN
FT05-B01	.088	.081	.115	.110
FT05-B02	.109	.105	.135	.130
FT05-B03	.138	.134	.165	.160

Downloaded from http://www.everyspec.com

TERMINALS, FEED THRU (INSULATED)

STYLE FT Ø6

(APPLICABLE SPECIFICATION: MIL-T-55155/5)

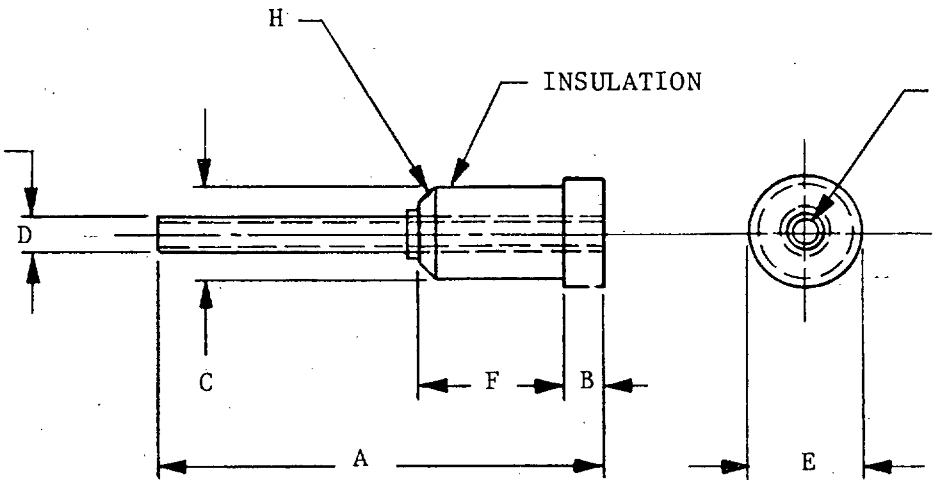

INCHES	MM
.002	.05
.015	.38
.025	.64
.030	.76
.050	1.27
.063	1.60
.085	2.16
.110	2.79
.125	3.18
.148	3.76
.150	3.81
.172	4.37
.193	4.90
.367	9.32

Dimensions								
Type designation	A	B	C +.002 -.000	D	E	F	G	H
FT06-B01	.193	.025	.125	.050	.150	.063	.030	.015 x 45°
FT06-B02	.367	.050	.148	.085	.172	.110	.063	

Downloaded from http://www.everyspec.com

MIL-T-55155/6

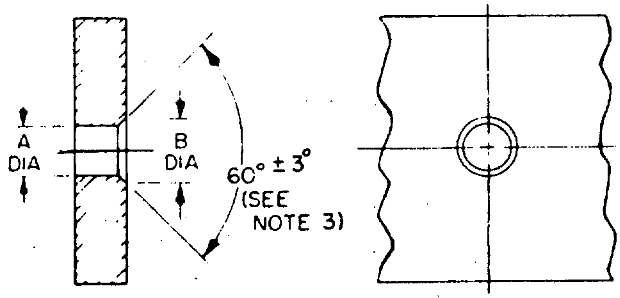

Type designation	Dimensions			
	A		B	
	MAX	MIN	MAX	MIN
FT06-B01	.115	.111	.140	.135
FT06-B02	.138	.134	.165	.160

INCHES	MM
.111	2.82
.115	2.92
.134	3.40
.135	3.43
.138	3.51
.140	3.56
.160	4.06
.165	4.19

Downloaded from http://www.everyspec.com

TERMINALS, FEED THRU (INSULATED)

STYLE FT Ø7

(APPLICABLE SPECIFICATION: MIL-T-55155/5)

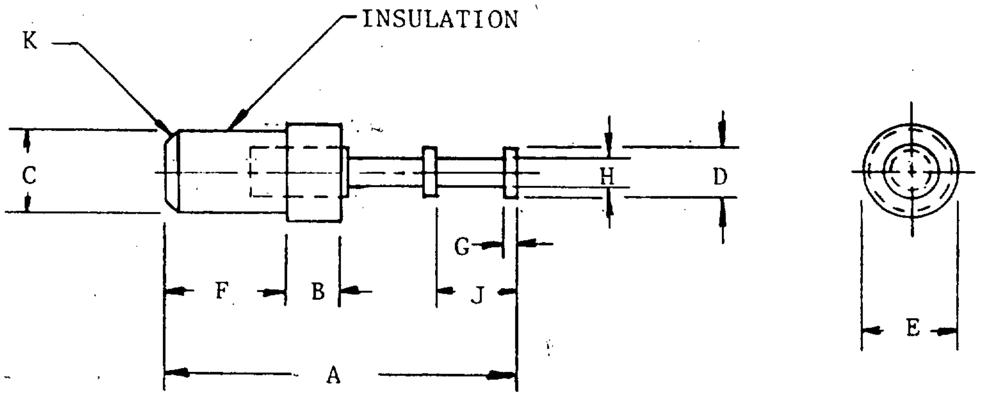

Type designation	A	B	C +.002 -.000	D	E	F	G	H	J	K
	Dimensions									
FT07-B01	.359	.040	.148	.080	.172	.110	.020	.040	.120	.015 x 45°
FT07-B02	.421	.125	.165	.093	.187	.150		.045	.068	
FT07-B03	.350	.040	.093	.080	.125	.100		.040	.120	

Downloaded from http://www.everyspec.com

MIL-T-55155/7

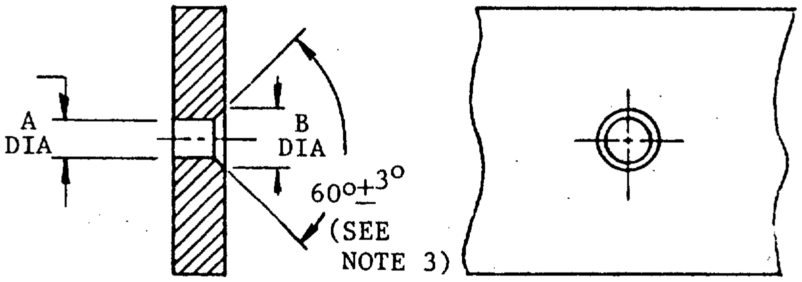

Type Designations	Dimensions			
	A		B	
	MAX	MIN	MAX	MIN
FT07-B01	.138	.134	.165	.160
FT07-B02	.154	.150	.180	.175
FT07-B03	.088	.081	.115	.110

INCHES	MM
.081	2.06
.088	2.24
.110	2.79
.115	2.92
.134	3.40
.138	3.51
.150	3.81
.154	3.91
.160	4.06
.165	4.19
.175	4.45
.180	4.57

Downloaded from http://www.everyspec.com

SECTION 400

TERMINALS, STUD

Section		Applicable document
401	Terminals, Stud (Insulated)	MIL-T-55155
402	Terminals, Stud (Noninsulated)	MIL-T-55155

Downloaded from http://www.everyspec.com

(This page left blank)

Downloaded from http://www.everyspec.com

SECTION 401

TERMINALS, STUD (INSULATED),
STYLE SE08

MIL-T-55155/8

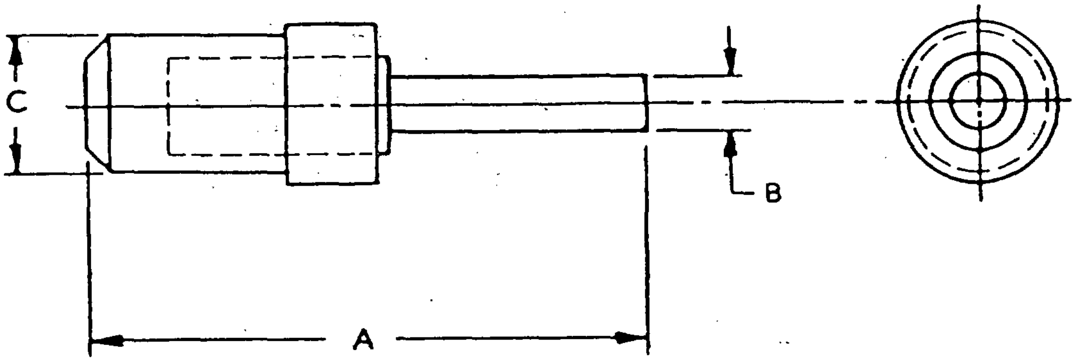

Type designation 1/	Dielectric withstanding voltage, ac (rms)	Dimensions		
		A	B	C
SE08-B01	1500	.350(8.89)	.040(1.02)	.148(3.76)
SE08-B02	1500	.350(8.89)	.040(1.02)	.093(2.36)

1/ Dash in type designation allows for different insulation colors in accordance with MIL-T-55155.

Downloaded from http://www.everyspec.com

TERMINALS, STUD (INSULATED), STYLE SE09

MIL-T-55155/9

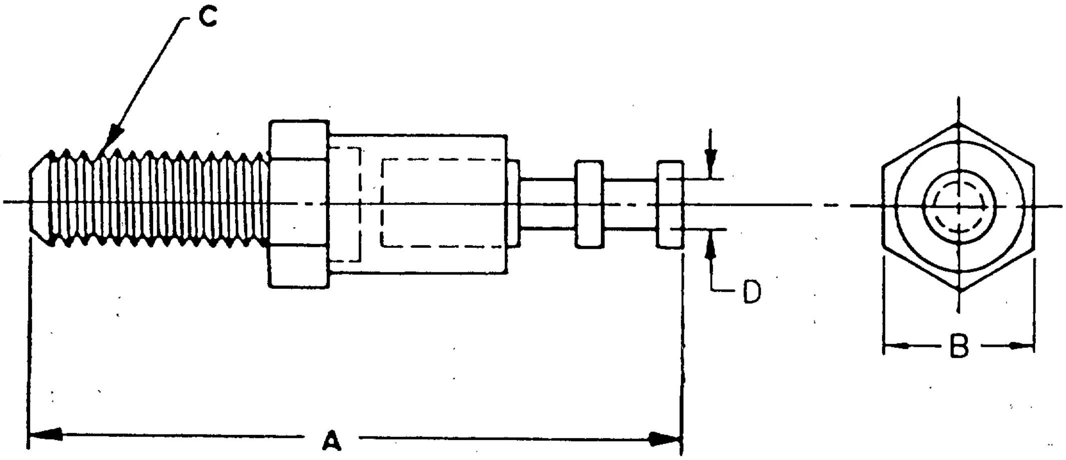

Type designation 1/	Dielectric withstanding voltage, ac (rms)	Dimensions			
		A	B	C	D
SE09-E01	3500	.750 (19.05)	.156 (3.96)	#4-40 UNC-2A	.045 (1.14)
SE09-E02	3300	.890 (22.61)	.250 (6.35)	#6-32 UNC-2A	.069 (1.75)
SE09-E03	3500	.688 (17.48)	.250 (6.35)	#4-40 UNC-2A	.050 (1.27)
SE09-E04	3500	.750 (19.05)	.250 (6.35)	#4-40 UNC-2A	.050 (1.27)
SE09-E05	3500	.875 (22.23)	.250 (6.35)	#4-40 UNC-2A	.050 (1.27)

1/ Dash in type designation allows for different insulation colors in accordance with MIL-T-55155.

Downloaded from http://www.everyspec.com

TERMINALS, STUD (INSULATED),
STYLE SE10

MIL-T-55155/10

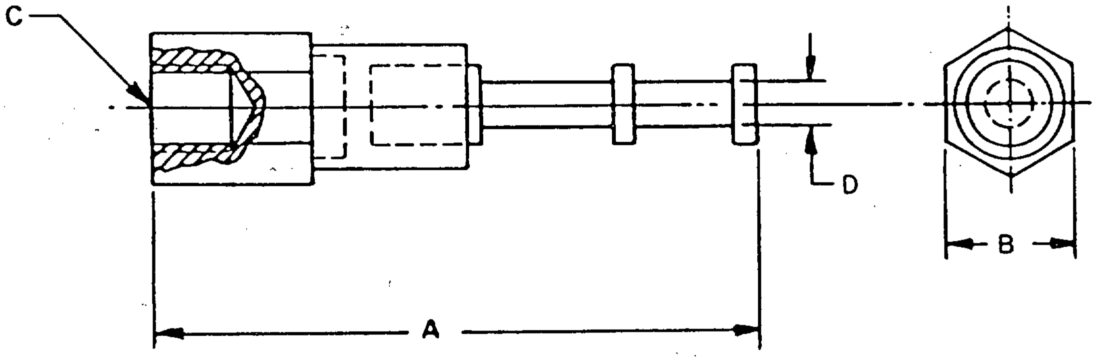

Type designation 1/	Dielectric withstanding voltage, ac (rms)	Dimensions			
		A	B	C	D
SE10-D01	3500	.546 (13.87)	.156 (3.96)	#4-40 UNC-2B	.045 (1.14)
SE10-D02	3300	.718 (18.24)	.250 (6.35)	#6-32 UNC-2B	.069 (1.75)

1/ Dash in type designation allows for different insulation colors in accordance with MIL-T-55155.

Downloaded from http://www.everyspec.com

TERMINALS, STUD (INSULATED),
STYLE SE18

MIL-T-55155/18

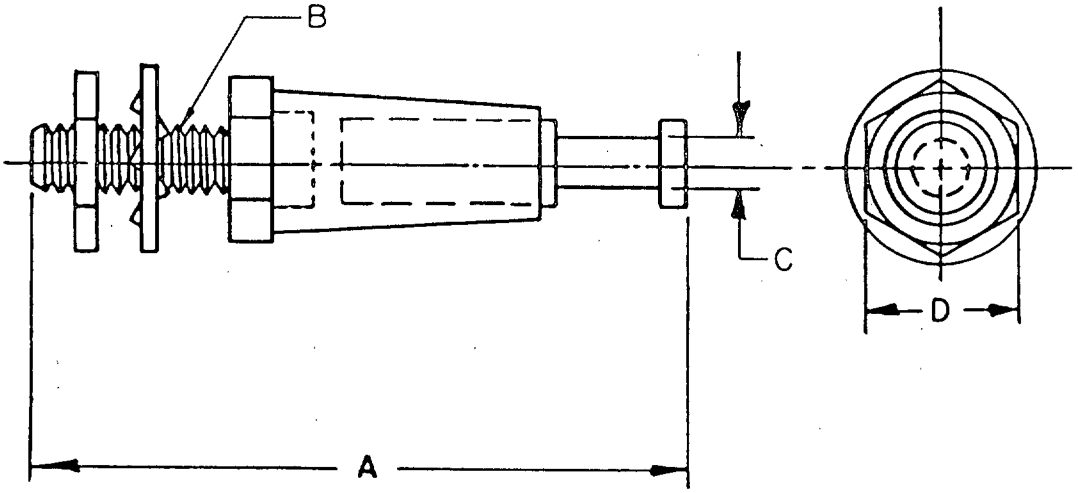

Type designation 1/	Dielectric withstanding voltage, ac (rms)	Dimensions			
		A	B	C	D
SE18-E01	2000	.593 (15.06)	#2-56 UNC-2A	0.055 (1.40)	.156 (3.96)
SE18-E02	3000	.750 (19.05)			

1/ Dash in type designation allows for different insulation colors in accordance with MIL-T-55155.

Downloaded from http://www.everyspec.com

TERMINALS, STUD (INSULATED), STYLE SE21

MIL-T-55155/21

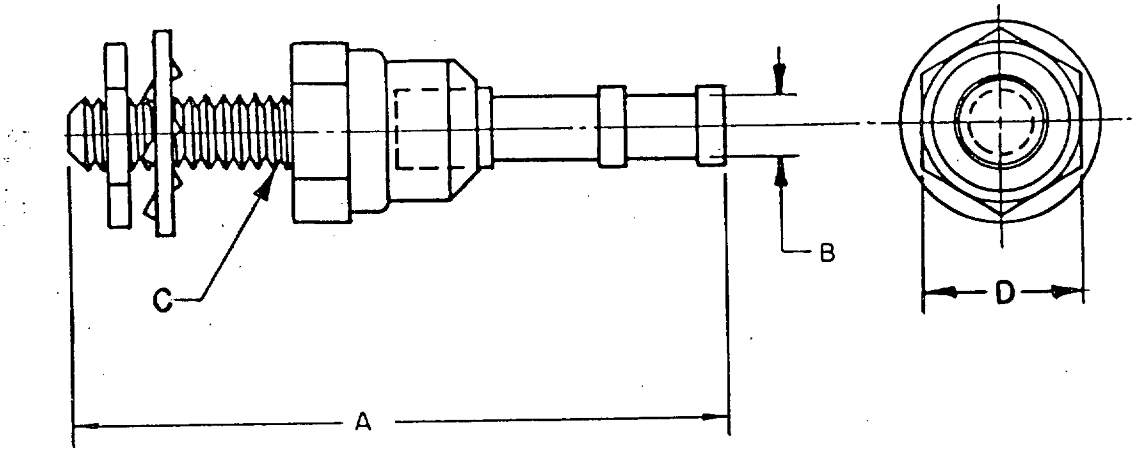

Type designation 1/	Dielectric withstanding voltage, ac (rms)	Dimensions			
		A	B	C	D
SE21-E01	1500	.781 (19.84)	.046 (1.17)	#4-40 UNC-2A	.250 (6.35)
SE21-E02	1500	.906 (23.01)			
SE21-E03	2000	.795 (20.19)		#6-32 UNC-2A	.312 (7.92)
SE21-E04	2000	.920 (23.37)			

1/ Dash in type designation allows for different insulation colors in accordance with MIL-T-55155.

Downloaded from http://www.everyspec.com

TERMINALS, STUD (INSULATED),
STYLE SE22

MIL-T-55155/22

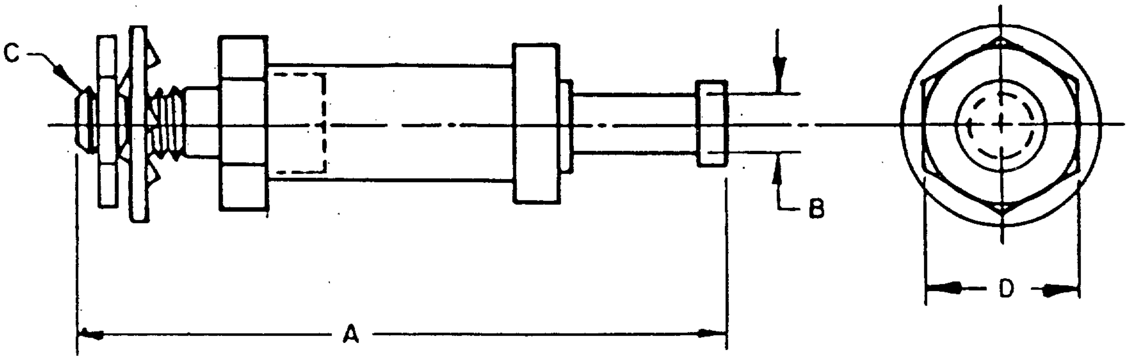

Type designation 1/	Dielectric withstanding voltage, ac (rms)	Dimensions			
		A	B	C	D
SE22-E01	1000	.523 (13.28)	.047 (1.19)	#2-56 UNC-2A	.125 (3.18)
SE22-E02	1000	.585 (14.86)			
SE22-E03	1000	.648 (16.46)			

1/ Dash in type designation allows for different insulation colors in accordance with MIL-T-55155.

Downloaded from http://www.everyspec.com

SECTION 402

TERMINALS, STUD (NONINSULATED),
STYLE SE11

MIL-T-55155/11

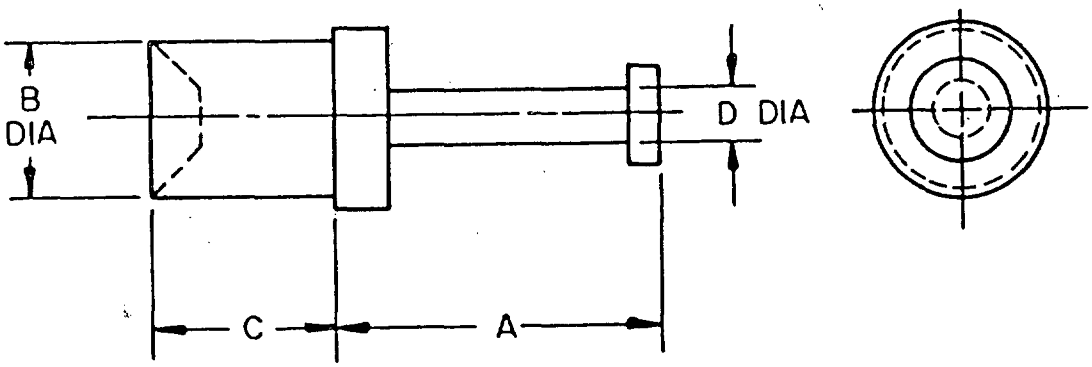

Type designation	Dimensions			
	A	B	C	D
SE11XC01	.104(2.64)	.072(1.83)	.082(2.08)	.038(.97)
SE11XC02	.104(2.64)	.072(1.83)	.113(2.87)	.038(.97)
SE11XC03	.104(2.64)	.072(1.83)	.145(3.68)	.038(.97)
SE11XC04	.094(2.39)	.063(1.60)	.053(1.35)	.045(1.14)
SE11XC05	.094(2.39)	.063(1.60)	.084(2.13)	.045(1.14)
SE11XC06	.094(2.39)	.063(1.60)	.115(2.92)	.045(1.14)
SE11XC07	.094(2.39)	.063(1.60)	.147(3.73)	.045(1.14)
SE11XC08	.094(2.39)	.042(1.07)	.037(.940)	.028(.711)
SE11XC09	.094(2.39)	.042(1.07)	.053(1.35)	.028(.711)
SE11XC10	.094(2.39)	.042(1.07)	.084(2.13)	.028(.711)

Downloaded from http://www.everyspec.com

TERMINALS, STUD (NONINSULATED),
STYLE SE12

MIL-T-55155/12

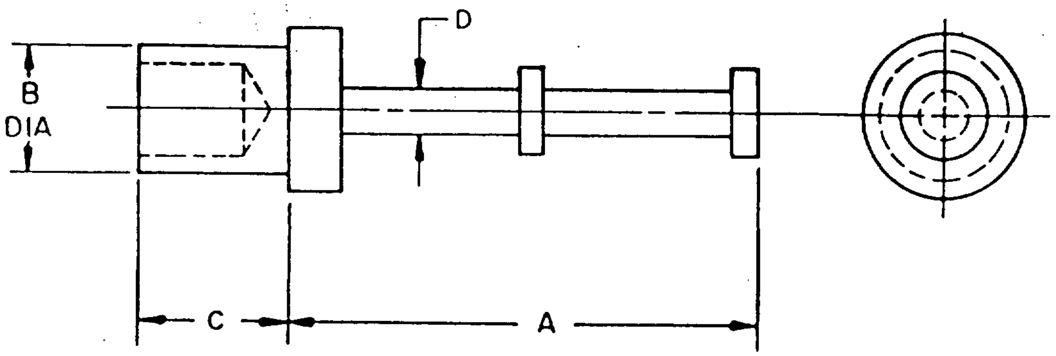

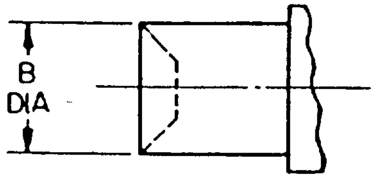

ALTERNATE MOUNTING BASE

Type designation	Dimensions			
	A	B	C	D
SE12XC01	.186(4.72)	.072(1.83)	.082(2.08)	.038(.970)
SE12XC02	.186(4.72)	.072(1.83)	.113(2.87)	.038(.970)
SE12XC03	.186(4.72)	.072(1.83)	.145(3.68)	.038(.970)
SE12XC04	.237(6.02)	.090(2.29)	.105(2.67)	.047(1.19)
SE12XC05	.237(6.02)	.090(2.29)	.135(3.43)	.047(1.19)
SE12XC06	.237(6.02)	.090(2.29)	.165(4.19)	.047(1.19)
SE12XC07	.360(9.14)	.112(2.84)	.109(2.77)	.065(1.65)
SE12XC08	.360(9.14)	.112(2.84)	.141(3.58)	.065(1.65)
SE12XC09	.360(9.14)	.112(2.84)	.172(4.37)	.065(1.65)
SE12XC10	.156(3.96)	.062(1.57)	.053(1.35)	.031(.790)
SE12XC11	.156(3.96)	.062(1.57)	.084(2.13)	.031(.790)
SE12XC12	.156(3.96)	.062(1.57)	.115(2.92)	.031(.790)
SE12XC13	.156(3.96)	.062(1.57)	.147(3.73)	.031(.790)
SE12XC14	.070(1.78)	.032(.810)	.053(1.35)	.020(.510)
SE12XC15	.070(1.78)	.032(.810)	.084(2.13)	.020(.510)
SE12XC16	.070(1.78)	.032(.810)	.115(2.92)	.020(.510)

Downloaded from http://www.everyspec.com

TERMINALS, STUD (NONINSULATED),
STYLE SE13

MIL-T-55155/13

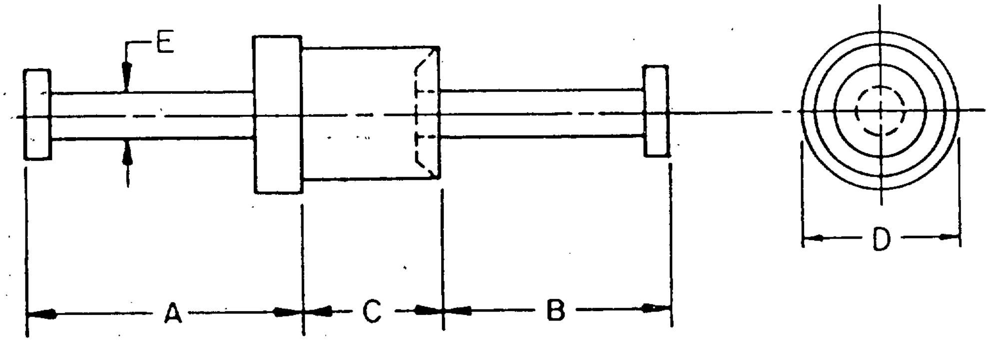

Type designation	Dimensions				
	A	B	C	D	E
SE13XC01	.104(2.64)	.082(2.08)	.082(2.08)	.093(2.36)	.038(.97)
SE13XC02			.113(2.87)		
SE13XC03			.145(3.68)		
SE13XC04	.156(3.96)	.125(3.18)	.105(2.67)	.156(3.96)	.040(1.02)
SE13XC05			.135(3.43)		
SE13XC06			.165(4.19)		

Downloaded from http://www.everyspec.com

TERMINALS, STUD (NONINSULATED),
STYLE SE14

MIL-T-55155/14

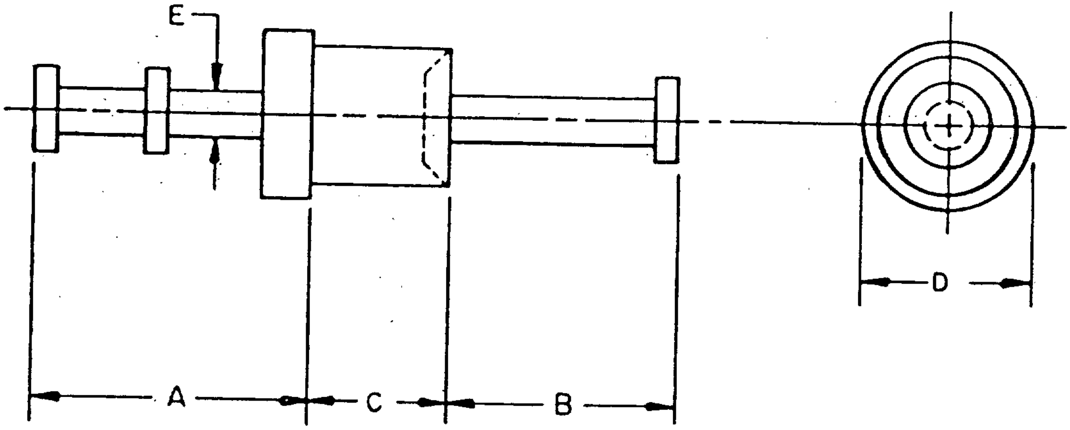

Type designation	Dimensions				
	A	B	C	D	E
SE14XC01	.186(4.72)	.082(2.08)	.082(2.08)	.093(2.36)	.038(.97)
SE14XC02			.113(2.87)		
SE14XC03			.145(3.68)		
SE14XC04	.360(9.14)	.109(2.77)	.105(2.67)	.187(4.75)	.065(1.65)
SE14XC05			.135(3.43)		
SE14XC06			.165(4.19)		

Downloaded from http://www.everyspec.com

TERMINALS, STUD (NONINSULATED), STYLE SE15

MIL-T-55155/15

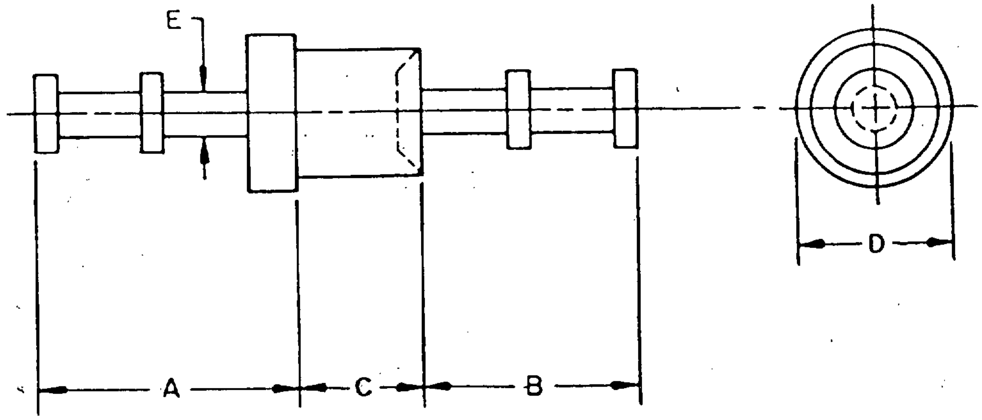

Type designation	Dimensions				
	A	B	C	D	E
SE15XC01	.186(4.72)	.164(4.17)	.082(2.08)	.093(2.36)	.038(.97)
SE15XC02	.186(4.72)	.164(4.17)	.113(2.87)	.093(2.36)	.038(.97)
SE15XC03	.186(4.72)	.164(4.17)	.145(3.68)	.093(2.36)	.038(.97)
SE15XC04	.237(6.02)	.134(3.40)	.105(2.67)	.156(3.96)	.047(1.19)
SE15XC05	.237(6.02)	.134(3.40)	.135(3.43)	.156(3.96)	.047(1.19)
SE15XC06	.237(6.02)	.134(3.40)	.165(4.19)	.156(3.96)	.047(1.19)
SE15XC07	.343(8.71)	.315(8.00)	.093(2.36)	.250(6.35)	.065(1.65)
SE15XC08	.343(8.71)	.315(8.00)	.125(3.18)	.250(6.35)	.065(1.65)
SE15XC09	.343(8.71)	.315(8.00)	.156(3.96)	.250(6.35)	.065(1.65)

Downloaded from http://www.everyspec.com

TERMINALS, STUD (NONINSULATED),
STYLE SE16

MIL-T-55155/16

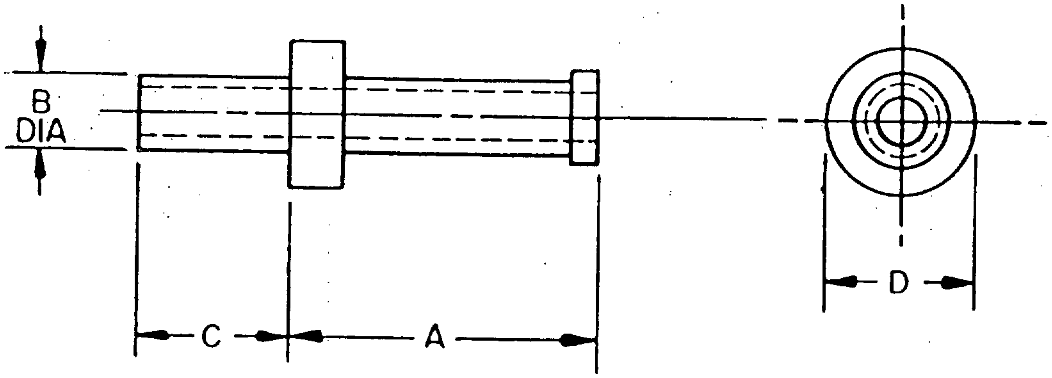

Type designation	Dimensions			
	A	B	C	D
SE16XC01	.156(3.96)	.062(1.57)	.084(2.13)	.125(3.18)
SE16XC02			.115(2.92)	
SE16XC03			.147(3.73)	

Downloaded from http://www.everyspec.com

TERMINALS, STUD (NONINSULATED), STYLE SE17

MIL-T-55155/17

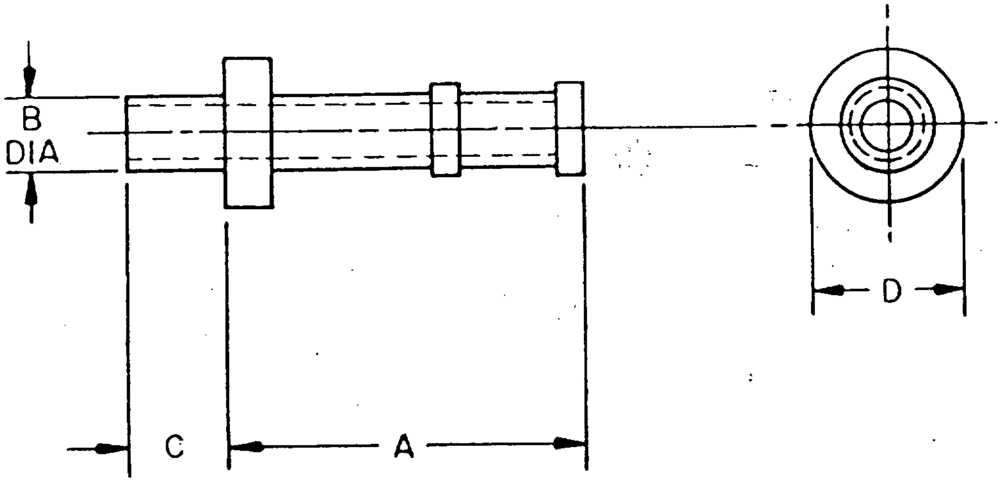

Type designation	Dimensions			
	A	B	C	D
SE17XC01 SE17XC02 SE17XC03	.328(8.33)	.112(2.84)	.109(2.77) .141(3.58) .172(4.37)	.187(4.75)

Downloaded from http://www.everyspec.com

TERMINALS, STUD (NONINSULATED),
STYLE SE23

MIL-T-55155/23

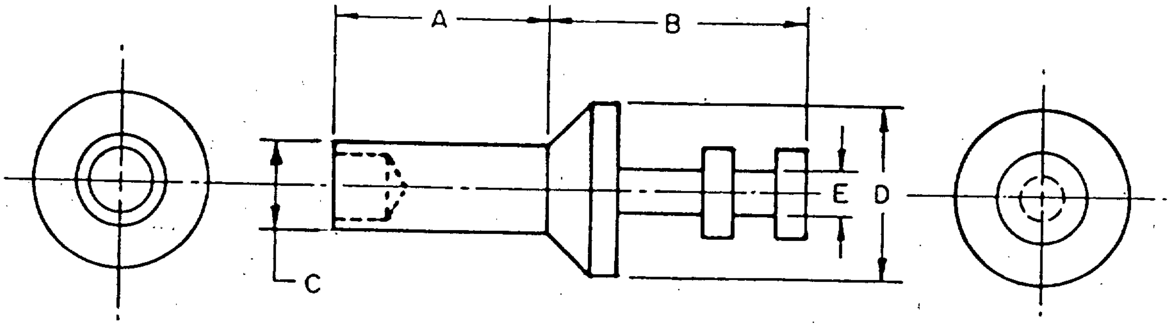

Type designation	Dimensions				
	A	B	C	D	E
SE23XC01	.062(1.57)	.188(4.78)	.060(1.52)	.125(3.18)	.031(.79)
SE23XC02	.094(2.39)				
SE23XC03	.125(3.18)				
SE23XC04	.156(3.96)				

Downloaded from http://www.everyspec.com

TERMINALS, STUD (NONINSULATED), STYLE SE24

MIL-T-55155/24

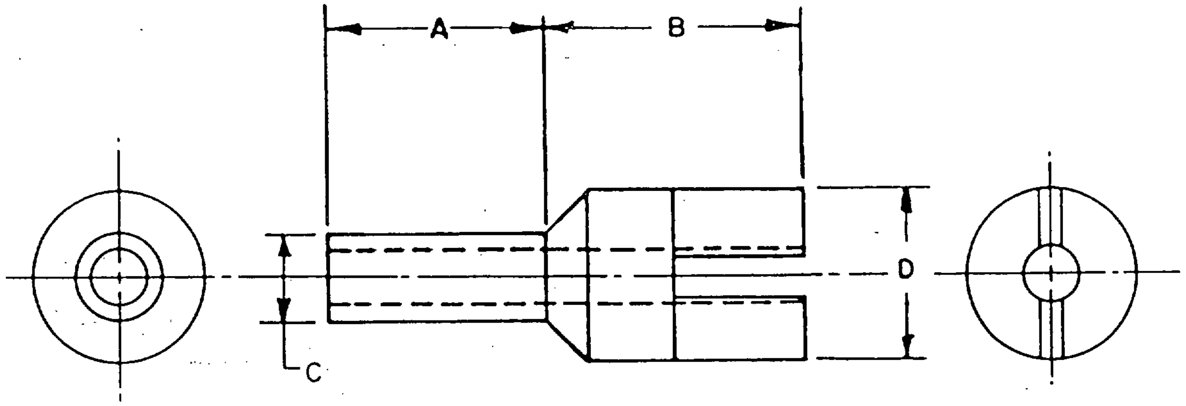

TYPE DESIGNATION	DIMENSIONS			
	A	B	C	D
SE24XC01	.062 (1.57)	.188(4.78)	.060(1.52)	.125(3.18)
SE24XC02	.094 (2.39)	.188(4.78)	.060(1.52)	.125(3.18)
SE24XC03	.125 (3.18)	.188(4.78)	.060(1.52)	.125(3.18)
SE24XC04	.156 (3.96)	.188(4.78)	.060(1.52)	.125(3.18)
SE24XC05	.037 (.940)	.125(3.18)	.063(1.60)	.094(2.39)
SE24XC06	.053 (1.35)	.125(3.18)	.063(1.60)	.094(2.39)
SE24XC07	.084 (2.13)	.125(3.18)	.063(1.60)	.094(2.39)
SE24XC08	.115 (2.92)	.125(3.18)	.063(1.60)	.094(2.39)
SE24XC09	.147 (3.73)	.125(3.18)	.063(1.60)	.094(2.39)
SE24XC10	.037 (.940)	.125(3.18)	.042(1.07)	.062(1.57)
SE24/C11	.053 (1.35)	.125(3.18)	.042(1.07)	.062(1.57)
SE24/C12	.084 (2.13)	.125(3.18)	.042(1.07)	.062(1.57)
SE24/C13	.115 (2.92)	.125(3.18)	.042(1.07)	.062(1.57)
SE24/C14	.147 (3.73)	.125(3.18)	.042(1.07)	.062(1.57)
SE24/C15	.053 (1.35)	.070(1.77)	.032(.820)	.047(1.19)
SE24/C16	.084 (2.13)	.070(1.77)	.032(.820)	.047(1.19)
SE24/C17	.115 (2.92)	.070(1.77)	.032(.820)	.047(1.19)

Downloaded from http://www.everyspec.com

TERMINALS, STUD (NONINSULATED),
STYLE SE25

MIL-T-55155/25

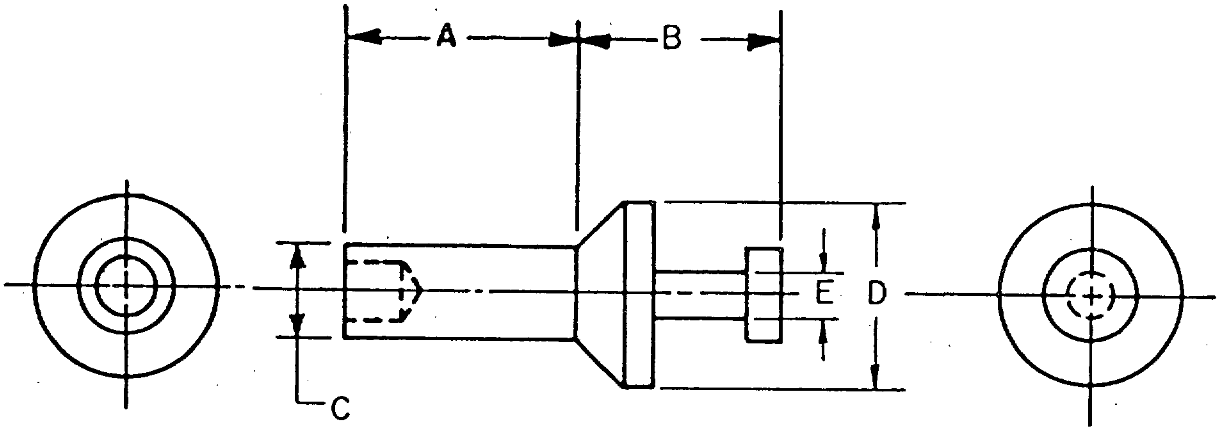

Type designation	Dimensions				
	A	B	C	D	E
SE25XC01	.062(1.57)	.136(3.45)	.060(1.52)	.125(3.18)	.031(.79)
SE25XC02	.094(2.39)				
SE25XC03	.125(3.18)				
SE25XC04	.156(3.96)				

Downloaded from http://www.everyspec.com

TERMINALS, STUD (NONINSULATED), (CIRCULAR, GROUND), STYLE SE26

(APPLICABLE SPECIFICATION: MIL-T-55155/26)

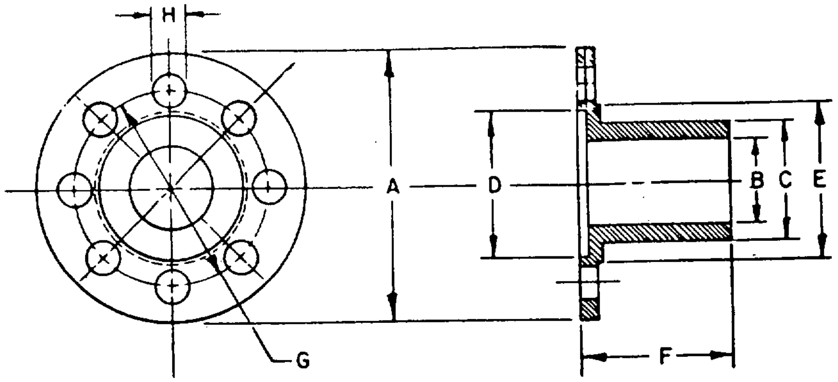

INCHES	MM
.020	.51
.030	.76
.040	1.02
.062	1.57
.078	1.98
.153	3.89
.191	4.85
.225	5.72
.250	6.35
.265	6.73
.280	7.11
.300	7.62
.312	7.92
.325	8.26
.365	9.27
.385	9.78
.500	12.70
.562	14.27
.750	19.05

Type designation	No. of holes required	Dimensions							
		A	B	C	D	E	F	G	H
SE26XF01	12	.750	.191	.312	.325	.365	.312	.562	.062
SE26XF02	10	.750	.191	.312	.325	.365	.250	.562	.078
SE26XF03	8	.500	.153	.225	.265	.300	.280	.385	.062

Downloaded from http://www.everyspec.com

TERMINALS, STUD (INSULATED), STYLE SE27

(APPLICABLE SPECIFICATION: MIL-T-55155/27)

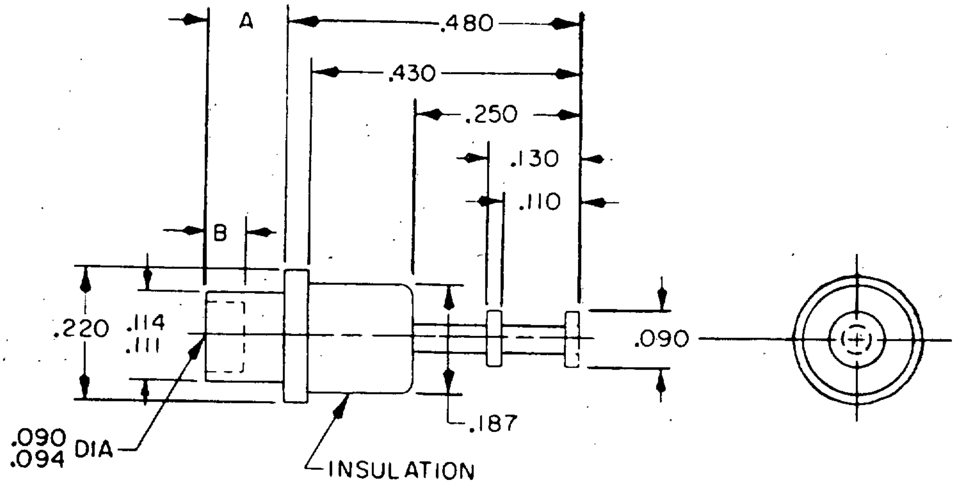

Type designation	Dimensions		Mounting board thickness (reference)
	A ± 0.003	B	
SE27-C01	.073	.062	.031
SE27-C02	.096	.070	.050
SE27-C03	.103		.062
SE27-C04	.133		.093
SE27-C05	.163		.125

INCH	MM	INCH	MM
.003	.08	.110	2.79
.020	.51	.111	2.82
.031	.79	.114	2.90
.050	1.27	.125	3.18
.062	1.57	.130	3.30
.070	1.78	.133	3.38
.073	1.85	.163	4.14
.090	2.29	.187	4.75
.093	2.36	.220	5.59
.094	2.39	.250	6.35
.096	2.44	.430	10.92
.103	2.62	.480	12.19

Downloaded from http://www.everyspec.com

TERMINAL, STUD, SINGLE TURRET
(NON-INSULATED,SWAGE MOUNTED)
STYLE SE-29

(Applicable Specification: MIL-T-55155/29)

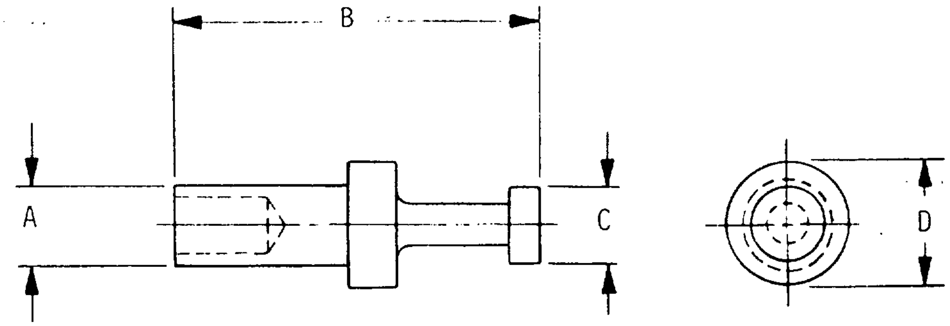

PART NUMBER	MOUNTING BOARD THICKNESS	A	B	C	D
M55155/29- 1	.016(.397)	.047(1.19)	.128(3.25)	.040(1.02)	.063(1.60)
M55155/29- 2	.031(.794)	.047(1.19)	.144(3.66)	.040(1.02)	.063(1.60)
M55155/29- 3	.031(.794)	.078(1.98)	.265(6.73)	.075(1.90)	.125(3.17)
M55155/29- 4	.031(.794)	.112(2.84)	.312(7.92)	.145(3.68)	.187(4.75)
M55155/29- 5	.062(1.59)	.047(1.19)	.175(4.44)	.040(1.02)	.063(1.60)
M55155/29- 6	.062(1.59)	.078(1.98)	.296(7.52)	.075(1.90)	.125(3.17)
M55155/29- 7	.062(1.59)	.112(2.84)	.343(8.71)	.145(3.68)	.187(4.75)
M55155/29- 8	.094(2.38)	.047(1.19)	.206(5.23)	.040(1.02)	.063(1.60)
M55155/29- 9	.094(2.38)	.078(1.98)	.327(8.30)	.075(1.90)	.125(3.17)
M55155/29-10	.094(2.38)	.112(2.84)	.374(9.50)	.145(3.68)	.187(4.75)
M55155/29-11	.125(3.17)	.047(1.19)	.238(6.04)	.040(1.02)	.063(1.60)
M55155/29-12	.125(3.17)	.078(1.98)	.357(9.07)	.075(1.90)	.125(3.17)
M55155/29-13	.125(3.17)	.112(2.84)	.404(10.26)	.145(3.68)	.187(4.75)
M55155/29-14	.156(3.97)	.112(2.84)	.429(10.29)	.145(3.68)	.187(4.75)
M55155/29-15	.187(4.76)	.112(2.84)	.464(11.78)	.145(3.68)	.187(4.75)
M55155/29-16	.250(6.35)	.112(2.84)	.531(13.49)	.145(3.68)	.187(4.75)

Downloaded from http://www.everyspec.com

TERMINAL, STUD, DOUBLE TURRET
(NON-INSULATED, SWAGE MOUNTED)
STYLE SE-30
(Applicable Specification MIL-T-55155/30)

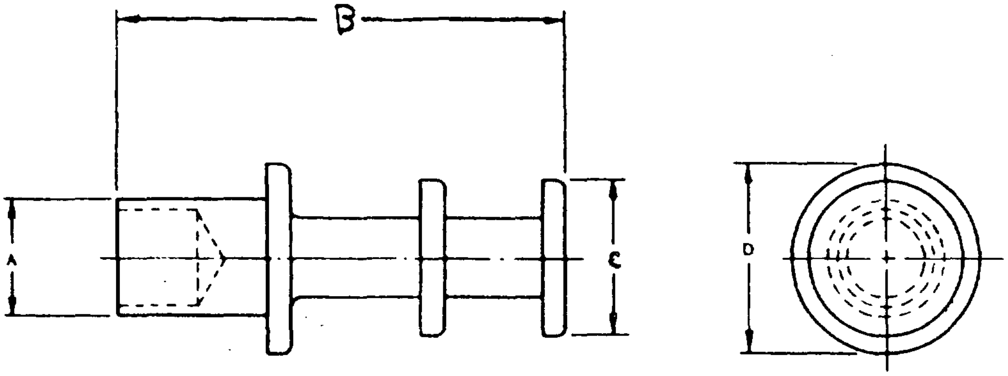

PART NUMBER	MOUNTING BOARD THICKNESS	A	B	C	D
M55155/30- 1	.016(.397)	.062(1.57)	.193(4.90)	.062(1.57)	.094(2.39)
M55155/30- 2	.031(.794)	.062(1.57)	.209(5.31)	.062(1.57)	.094(2.39)
M55155/30- 3	.031(.794)	.090(2.29)	.296(7.52)	.094(2.39)	.125(3.17)
M55155/30- 4	.031(.794)	.112(2.84)	.437(11.10)	.145(3.68)	.187(4.75)
M55155/30- 5	.062(1.59)	.062(1.57)	.240(6.10)	.062(1.57)	.094(2.37)
M55155/30- 6	.062(1.59)	.090(2.29)	.327(8.30)	.094(2.39)	.125(3.17)
M55155/30- 7	.062(1.59)	.112(2.84)	.468(11.89)	.145(3.68)	.187(4.75)
M55155/30- 8	.062(1.59)	.262(6.65)	.609(15.47)	.200(5.08)	.312(7.92)
M55155/30- 9	.094(2.38)	.062(1.57)	.271(6.88)	.062(1.57)	.094(2.37)
M55155/30-10	.094(2.38)	.090(2.29)	.358(9.09)	.094(2.39)	.125(3.17)
M55155/30-11	.094(2.38)	.112(2.84)	.499(12.67)	.145(3.68)	.187(4.75)
M55155/30-12	.094(2.38)	.262(6.65)	.640(16.25)	.200(5.08)	.312(7.92)
M55155/30-13	.125(3.17)	.062(1.57)	.303(6.70)	.062(1.57)	.094(2.37)
M55155/30-14	.125(3.17)	.090(2.29)	.289(9.88)	.094(2.39)	.125(3.17)
M55155/30-15	.125(3.17)	.112(2.84)	.530(13.46)	.145(3.68)	.187(4.75)
M55155/30-16	.125(3.17)	.262(6.65)	.671(17.04)	.200(5.08)	.312(7.92)
M55155/30-17	.187(4.76)	.090(2.29)	.452(11.48)	.094(2.39)	.125(3.17)
M55155/30-18	.187(4.76)	.112(2.84)	.593(15.06)	.145(3.68)	.187(4.75)
M55155/30-19	.187(4.76)	.262(6.65)	.734(18.64)	.200(5.08)	.312(7.92)
M55155/30-20	.250(6.35)	.090(2.29)	.514(13.05)	.094(2.39)	.125(3.17)
M55155/30-21	.250(6.35)	.112(2.84)	.655(16.64)	.145(3.68)	.187(4.75)
M55155/30-22	.250(6.35)	.262(6.65)	.796(20.22)	.200(5.08)	.312(7.92)

Downloaded from http://www.everyspec.com

TERMINAL, STUD, TRIPLE TURRENT
(NON-INSULATED, SWAGE MOUNTED)
STYLE SE-31
(Applicable Specification MIL-T-55155/31)

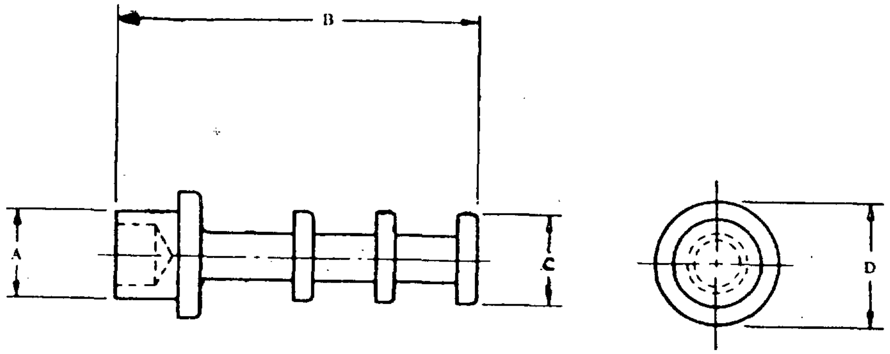

Part number	Dimensions			
	A	B	C	D
M55155/31-1	.090(2.29)	.363(9.22)	.093(2.36)	.125(3.17)
M55155/31-2	.112(2.84)	.562(14.27)	.145(3.68)	.187(4.75)
M55155/31-3	.090(2.29)	.394(10.00)	.093(2.36)	.125(3.17)
M55155/31-4	.112(2.84)	.593(15.06)	.145(3.68)	.187(4.75)
M55155/31-5	.090(2.29)	.426(10.82)	.093(2.36)	.125(3.17)
M55155/31-6	.112(2.84)	.624(15.85)	.145(3.68)	.187(4.75)
M55155/31-7	.090(2.29)	.457(11.61)	.093(2.36)	.125(3.17)
M55155/31-8	.112(2.84)	.655(16.64)	.145(3.68)	.187(4.75)
M55155/31-9	.112(2.84)	.679(17.25)	.145(3.68)	.187(4.75)
M55155/31-10	.090(2.29)	.519(13.18)	.093(2.36)	.125(3.17)
M55155/31-11	.112(2.84)	.718(18.24)	.145(3.68)	.187(4.75)
M55155/31-12	.112(2.84)	.780(19.81)	.145(3.68)	.187(4.75)

Downloaded from http://www.everyspec.com

TERMINAL, STUD, FORK TYPE
(NON-INSULATED, SWAGE MOUNTED)

(Applicable Specification: MIL-T-55155/32)

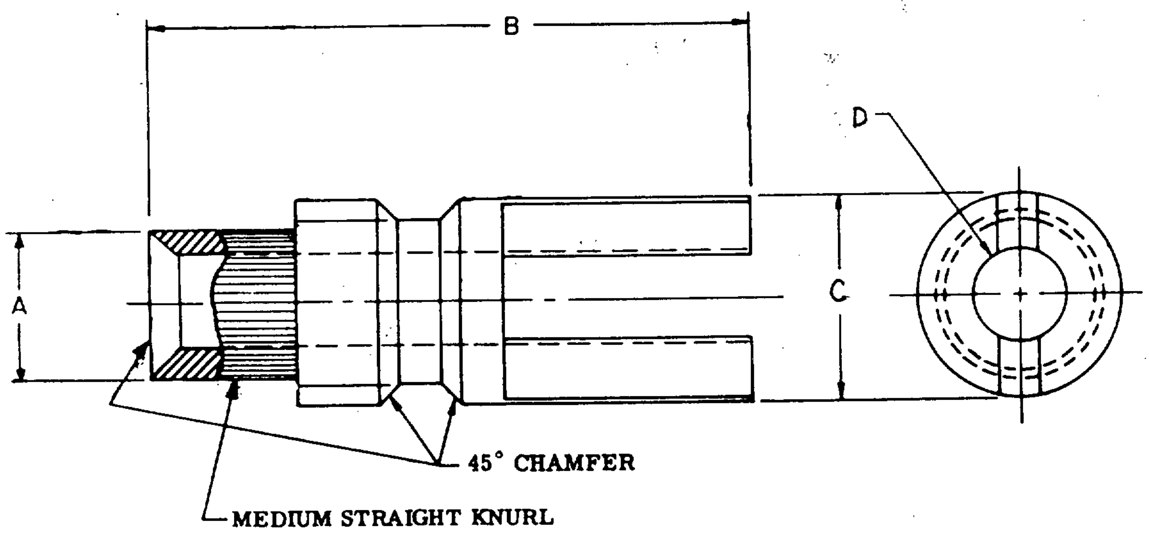

PART NUMBER	MOUNTING BOARD THICKNESS	DIMENSIONS A	DIMENSIONS B	DIMENSIONS C	DIMENSIONS D
M55155/32- 1	.062(1.59)	.112(2.84)	.452(11.48)	.156(3.96)	.070(1.78)
M55155/32- 2	.062(1.59)	.135(3.43)	.609(15.47)	.218(5.54)	.102(2.59)
M55155/32- 3	.094(2.38)	.112(2.84)	.483(12.27)	.156(3.96)	.070(1.78)
M55155/32- 4	.094(2.38)	.135(3.43)	.640(16.25)	.218(5.54)	.102(2.59)
M55155/32- 5	.094(2.38)	.185(4.70)	.827(21.00)	.250(6.35)	.120(3.05)
M55155/32- 6	.125(3.17)	.112(2.84)	.514(13.05)	.156(3.96)	.070(1.78)
M55155/32- 7	.125(3.17)	.135(3.43)	.671(17.04)	.218(5.54)	.102(2.59)
M55155/32- 8	.125(3.17)	.185(4.70)	.858(21.79)	.250(6.35)	.120(3.05)
M55155/32- 9	.156(3.97)	.185(4.70)	.882(22.40)	.250(6.35)	.120(3.05)
M55155/32-10	.187(4.76)	.185(4.70)	.921(23.39)	.250(6.35)	.120(3.05)
M55155/32-11	.250(6.35)	.185(4.70)	.983(24.97)	.250(6.35)	.120(3.05)

Downloaded from http://www.everyspec.com

SECTION 500

TERMINAL BOARDS

Section		Applicable Document
501	Terminal Boards, Molded, Barrier, Stud Type	MIL-T-55164
502	Terminal Boards, Molded, Barrier, Screw Type	MIL-T-55164
503	Terminal Board Lugs, Styles TBLD and TBLS	MIL-T-55164
504	Terminal Board, Assembly,Molded-in Stud,Electric	MS27212
505	Terminal Board, Jumpers Styles TBJA, TBJB, TBJC, TBJD, TBJE, TBJF, and TBJG	MIL-T-55164

Downloaded from http://www.everyspec.com

(This page left blank)

Downloaded from http://www.everyspec.com

SECTION 501

TERMINAL BOARD, MOLDED, BARRIER,
STUD TYPE, CLASS 3TB

MIL-T-55164/9

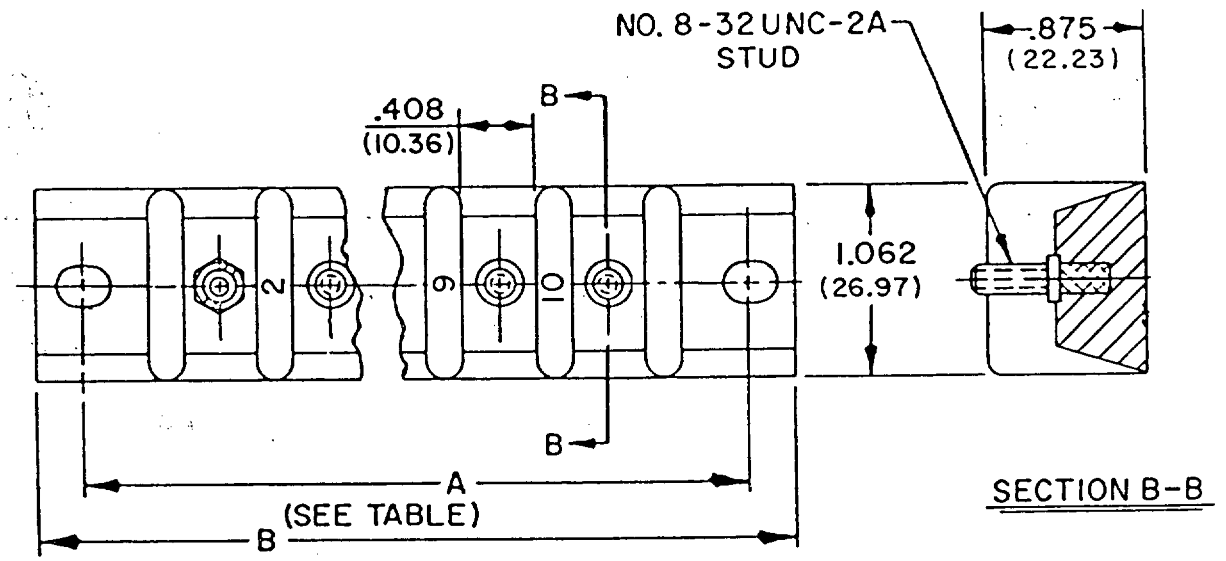

Type designation	Dimensions		Recommended wire terminal lugs MS17143(dash no.)	Maximum voltage rating	Maximum current rating
	A	B			
3TB10	6.875(174.63)	7.375(187.33)	-1 -2 -3	600 volts	45 amps

Downloaded from http://www.everyspec.com

TERMINAL BOARDS, MOLDED, BARRIER,
STUD TYPE, CLASS 4TB

MIL-T-55164/10

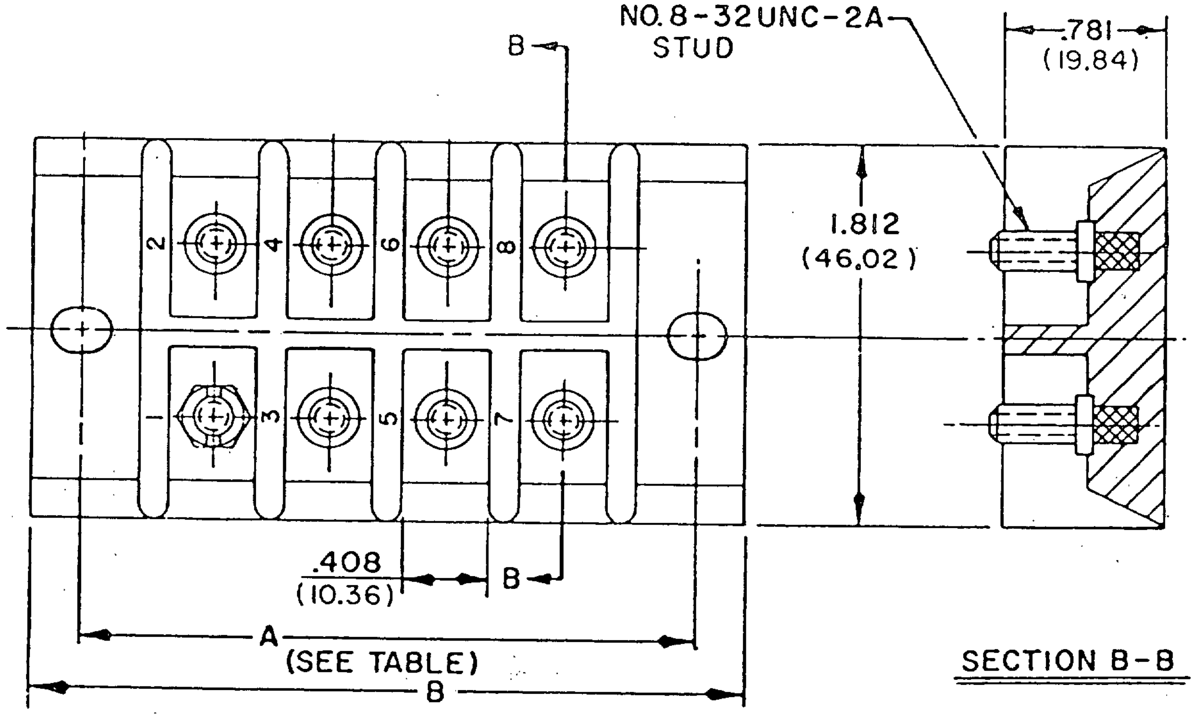

Type designation	Dimensions		Recommended wire terminal lugs MS17143(dash no.)	Maximum voltage rating	Maximum current rating
	A	B			
4TB8 4TB20	2.875(73.03) 6.000(152.40)	3.375(85.73) 6.500(165.10)	-1 -2 -3	600 volts	40 amps

Downloaded from http://www.everyspec.com

TERMINAL BOARDS, MOLDED, BARRIER,
STUD TYPE, CLASS 5TB

MIL-T-55164/11

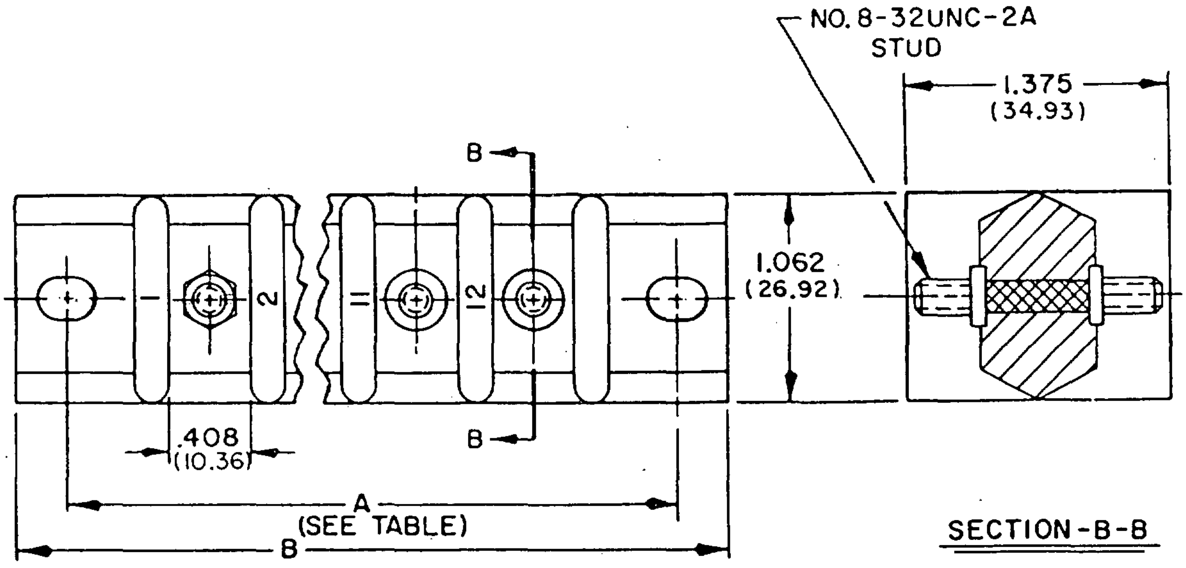

Type designation	Dimensions		Recommended wire terminal lugs MS17143(dash no.)	Maximum voltage rating	Maximum current rating
	A	B			
5TB8	5.625(142.88)	6.125(155.58)	-1	600 volts	50 amps
5TB10	6.875(174.63)	7.375(187.33)	-2		
5TB12	8.000(203.20)	8.500(215.90)	-3		

Downloaded from http://www.everyspec.com

TERMINAL BOARDS, MOLDED, BARRIER, STUD TYPE, CLASS 6TB

MIL-T-55164/12

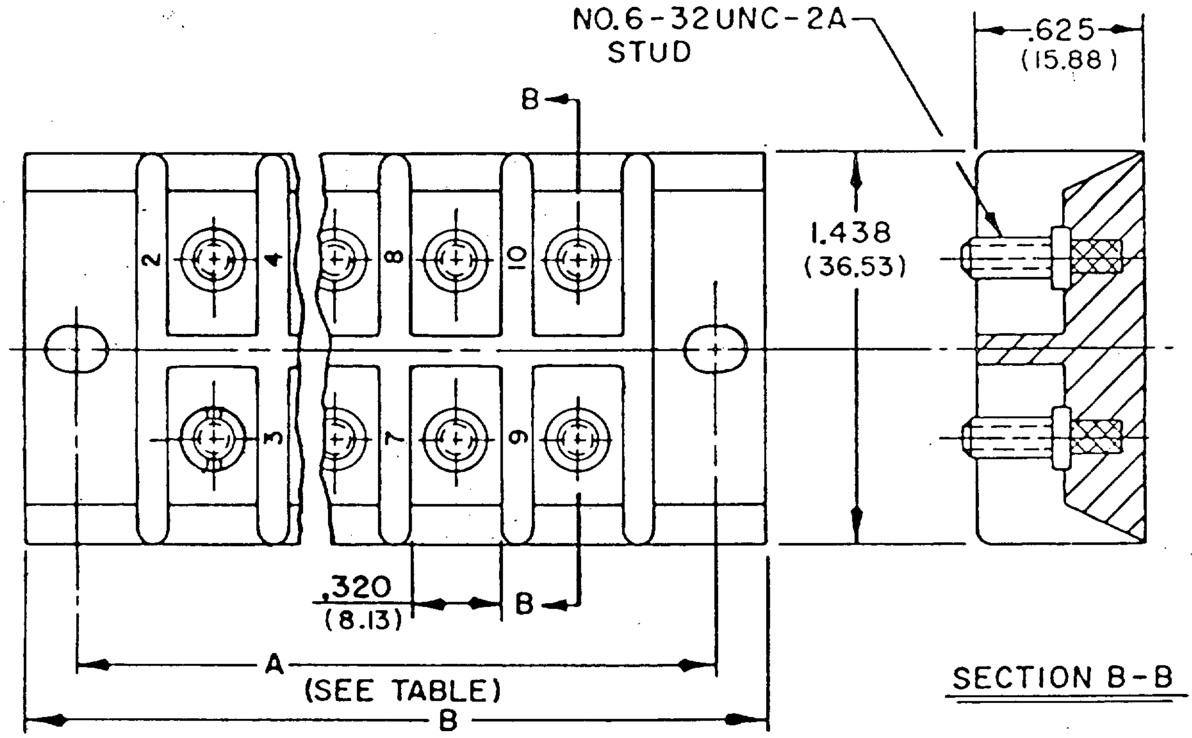

SECTION B-B

Type designation	Dimensions		Recommended wire terminal lugs MS17143 (dash no.)	Maximum voltage rating	Maximum current rating
	A	B			
6TB6	2.000(50.80)	2.500(63.40)	-4	600 volts	30 amps
6TB10	2.875(73.03)	3.375(85.73)	-5		
6TB24	6.000(152.40)	6.500(165.10)	-6		

Downloaded from http://www.everyspec.com

TERMINAL BOARDS, MOLDED, BARRIER,
STUD TYPE, CLASS 7TB

MIL-T-55164/13

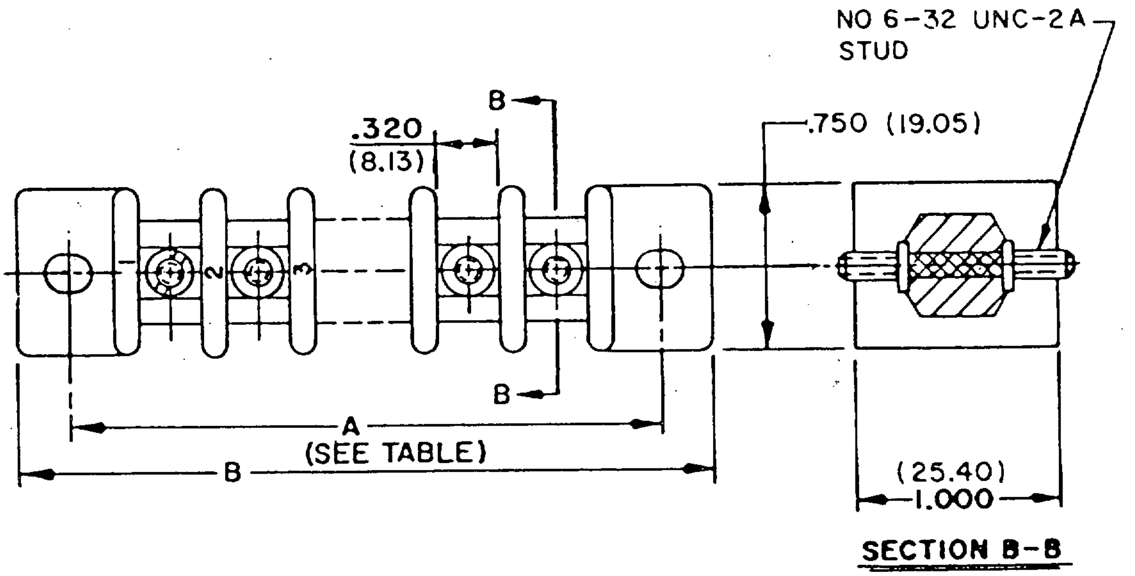

Type designation	Dimensions		Recommended wire terminal lugs MS17143(dash no.)	Maximum voltage rating	Maximum current rating
	A	B			
7TB8 7TB12	4.125(104.78) 6.000(152.40)	4.625(117.48) 6.500(165.10)	-4 -5 -6	600 volts	40 amps

Downloaded from http://www.everyspec.com

TERMINAL BOARDS, MOLDED, BARRIER,
STUD TYPE, CLASSES 8TB AND 8TBHT

MIL-T-55164/14

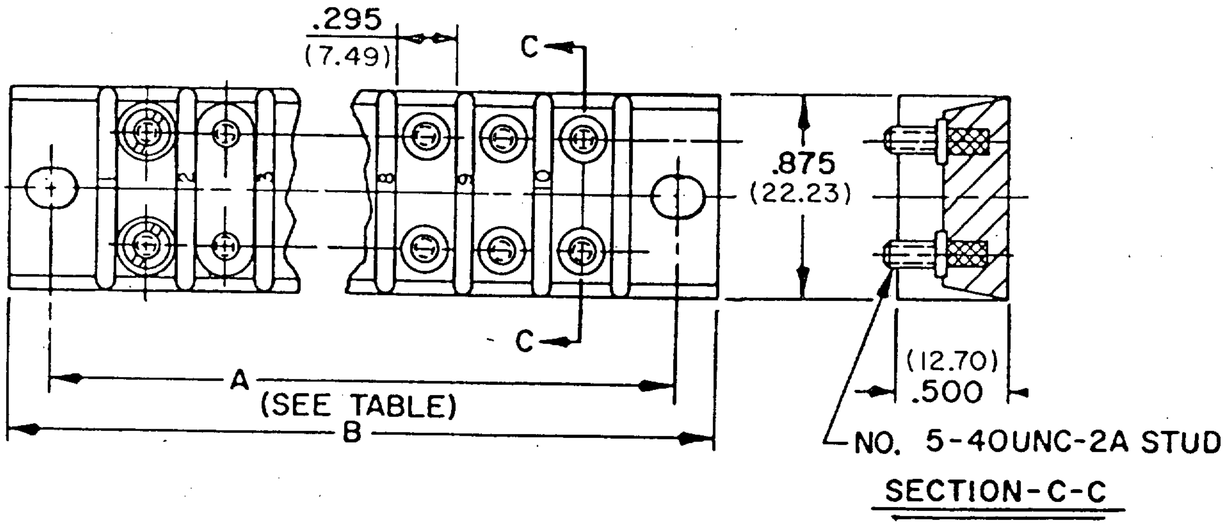

Type designation	Dimensions		Recommended wire terminal lugs MS17143(dash no.)	Maximum voltage rating	Maximum current rating
	A	B			
8TB2 8TB2HT	1.250(31.75)	1.625(41.28)	-10 -11 -12	300 volts	30 amps
8TB6 8TB6HT	2.750(69.85)	3.125(79.38)			
8TB8 8TB8HT	3.500(88.90)	3.875(98.43)			
8TB10 8TB10HT	4.250(107.95)	4.625(117.48)			

Downloaded from http://www.everyspec.com

TERMINAL BOARDS, MOLDED, BARRIER,
STUD TYPE, CLASS 9TB

MIL-T-55164/15

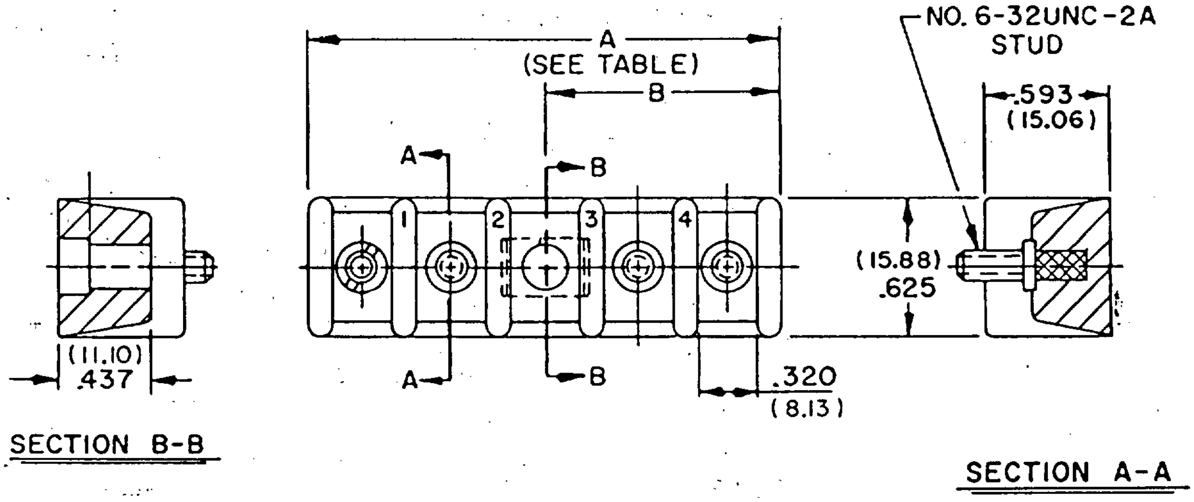

Type designation	Dimensions		Recommended wire terminal lugs MS17143(dash no.)	Maximum voltage rating	Maximum current rating
	A	B			
9TB2 9TB4	1.469(37.31) 2.375(60.33)	.734(18.64) 1.188(30.18)	-4 -5 -6	300 volts	35 amps

Downloaded from http://www.everyspec.com

TERMINAL BOARDS, MOLDED, BARRIER,
STUD TYPE, CLASS 10TB

MIL-T-55164/16

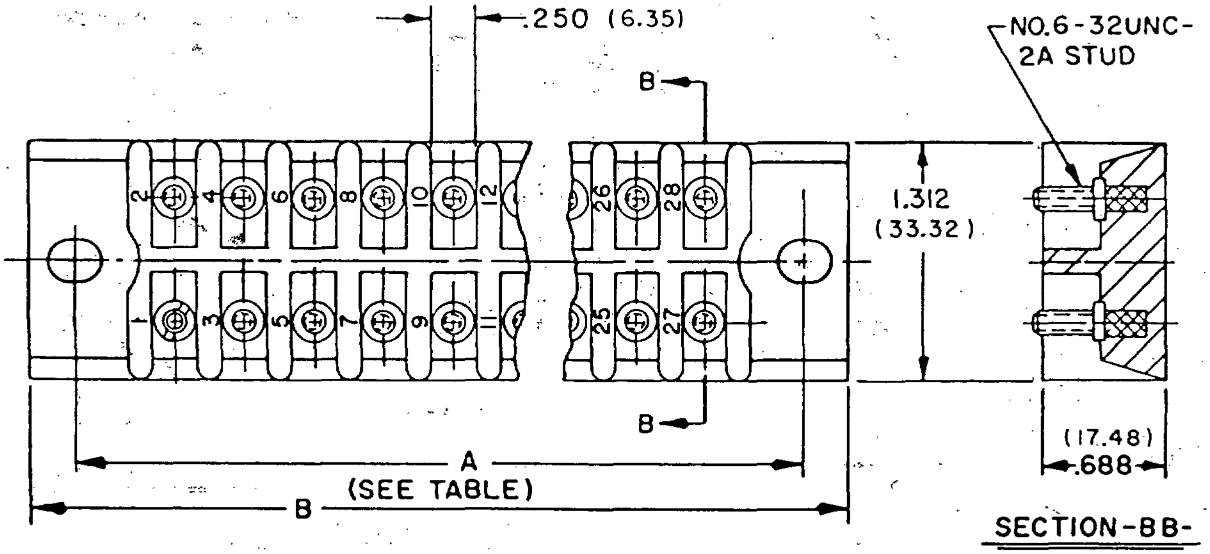

Type designation	Dimensions		Recommended wire terminal lugs MS17143(dash no.)	Maximum voltage rating	Maximum current rating
	A	B			
10TB8 10TB12 10TB18 10TB28	2.000(50.80) 2.875(73.03) 4.125(104.78) 6.000(152.40)	2.500(63.50) 3.375(85.73) 4.625(117.48) 6.500(165.10)	-13 -14 -15	600 volts	30 amps

Downloaded from http://www.everyspec.com

TERMINAL BOARDS, MOLDED, BARRIER,
STUD TYPE, CLASS 11TB

MIL-T-55164/17

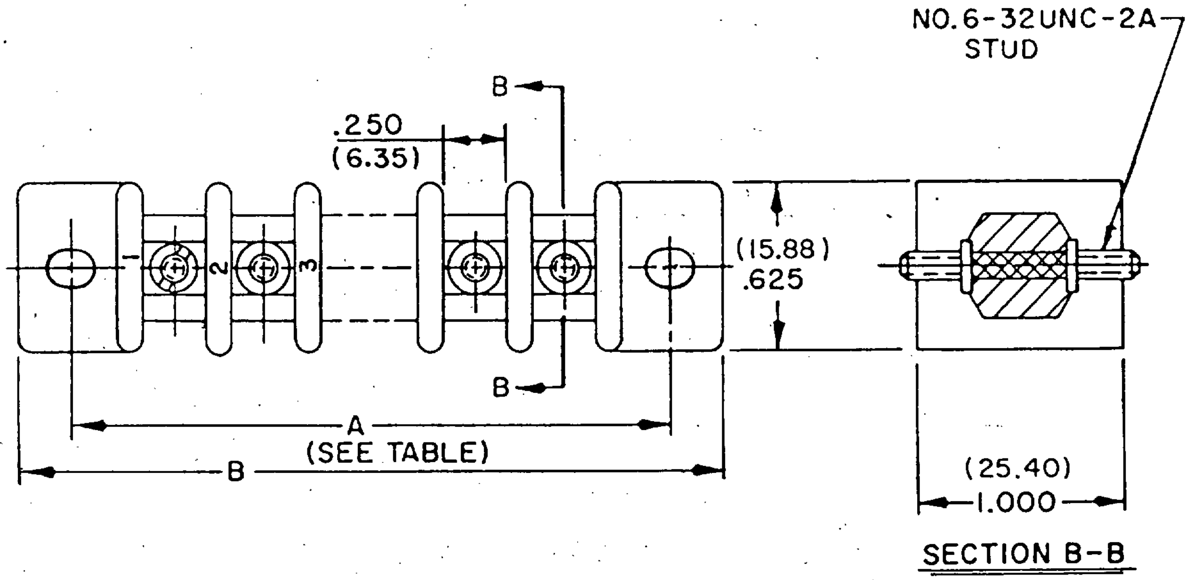

Type designation	Dimensions		Recommended wire terminal lugs MS17143(dash no.)	Maximum voltage rating	Maximum current rating
	A	B			
11TB4 11TB6 11TB9 11TB14	2.000(50.80) 2.875(73.03) 4.125(104.78) 6.000(152.40)	2.500(63.50) 3.375(85.73) 4.625(117.48) 6.500(165.10)	-13 -14 -15	600 volts	40 amps

Downloaded from http://www.everyspec.com

TERMINAL BOARD, MOLDED, BARRIER,
STUD TYPE, CLASS 13TB

MIL-T-55164/18

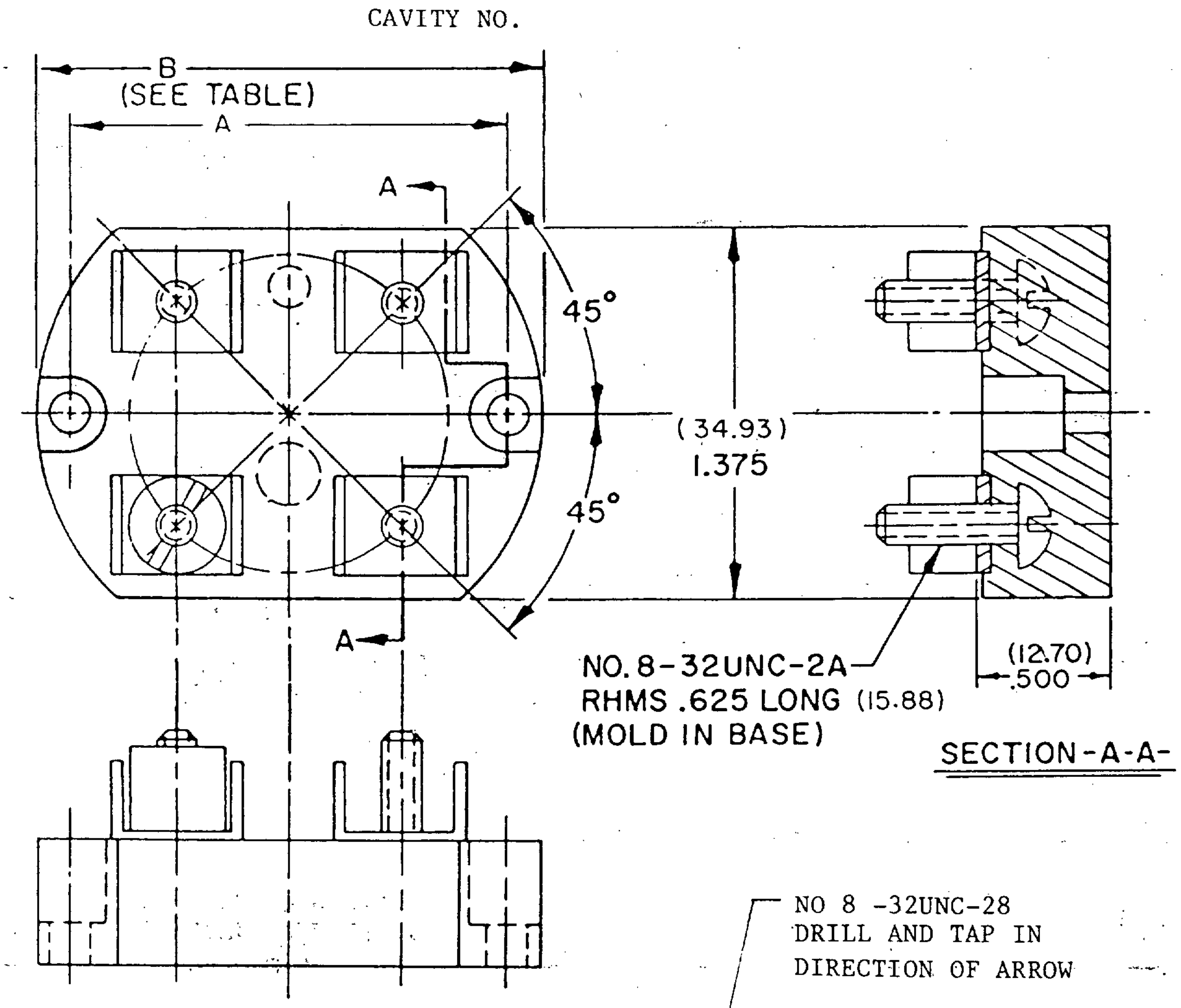

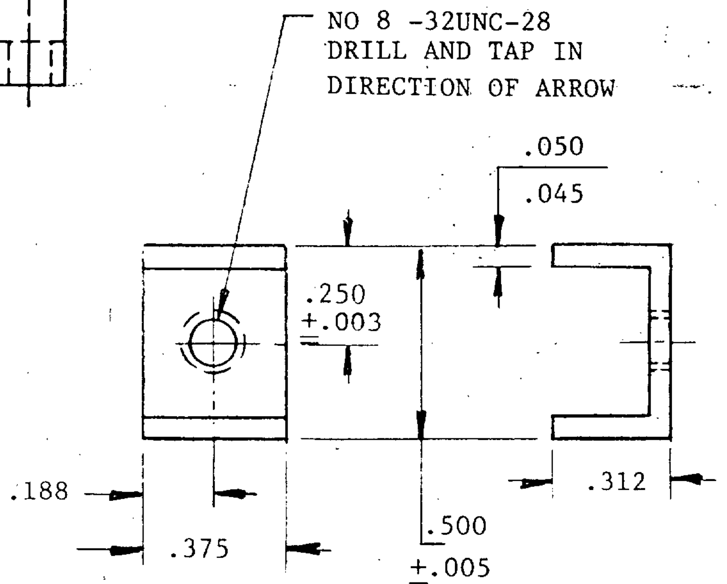

TERMINAL STRIP
DETAIL -C-

Downloaded from http://www.everyspec.com

ALTERNATE DESIGN

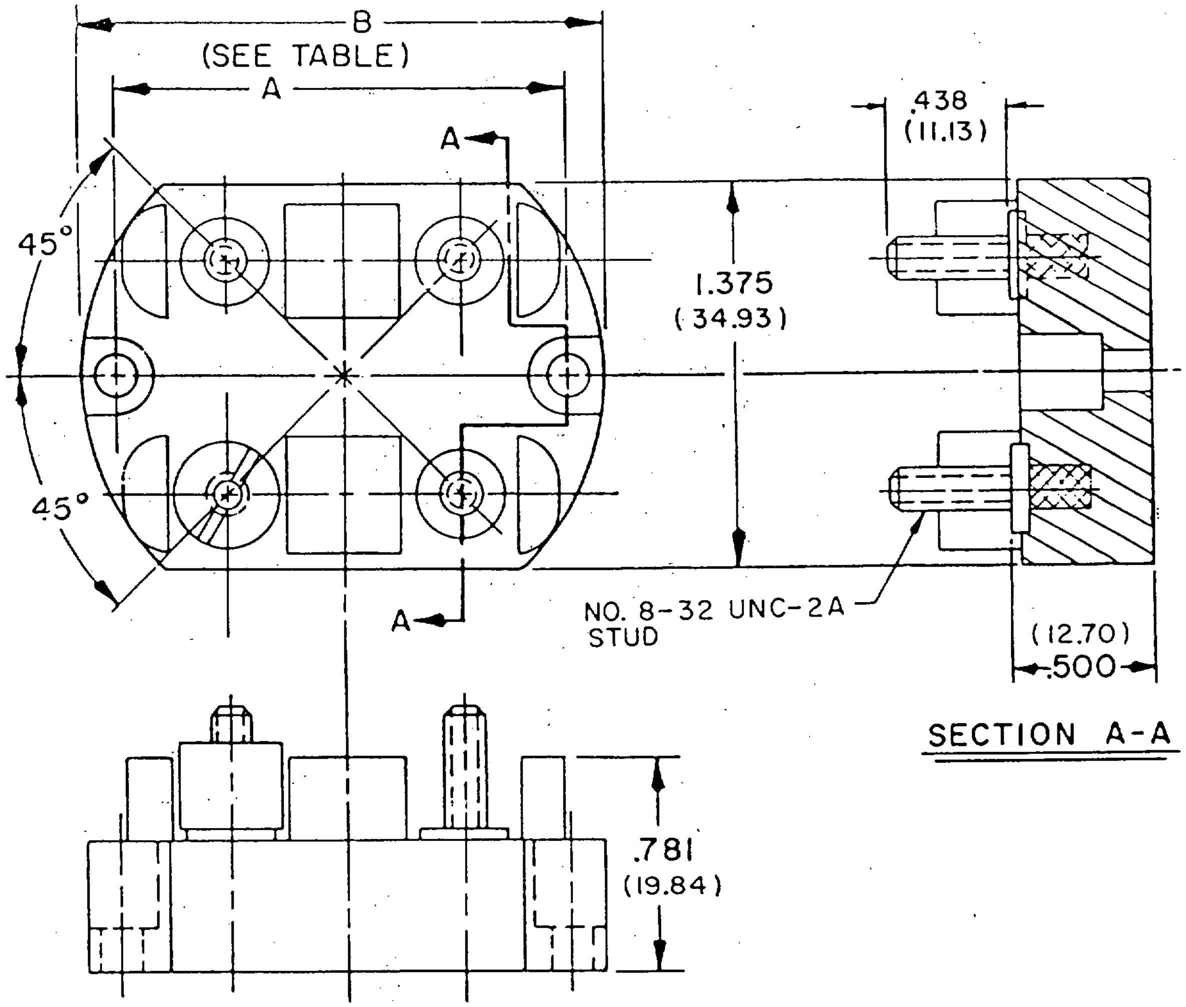

Type designation	Dimensions		Recommended wire terminal lugs MS17143(dash no.)	Maximum voltage rating	Maximum current rating
	A	B			
13TB4	1.625(41.28)	1.875(47.63)	-1 -2 -3	150 volts	15 amps

Downloaded from http://www.everyspec.com

TERMINAL BOARDS, MOLDED, BARRIER,
STUD TYPE, CLASS 15TB

MIL-T-55164/19

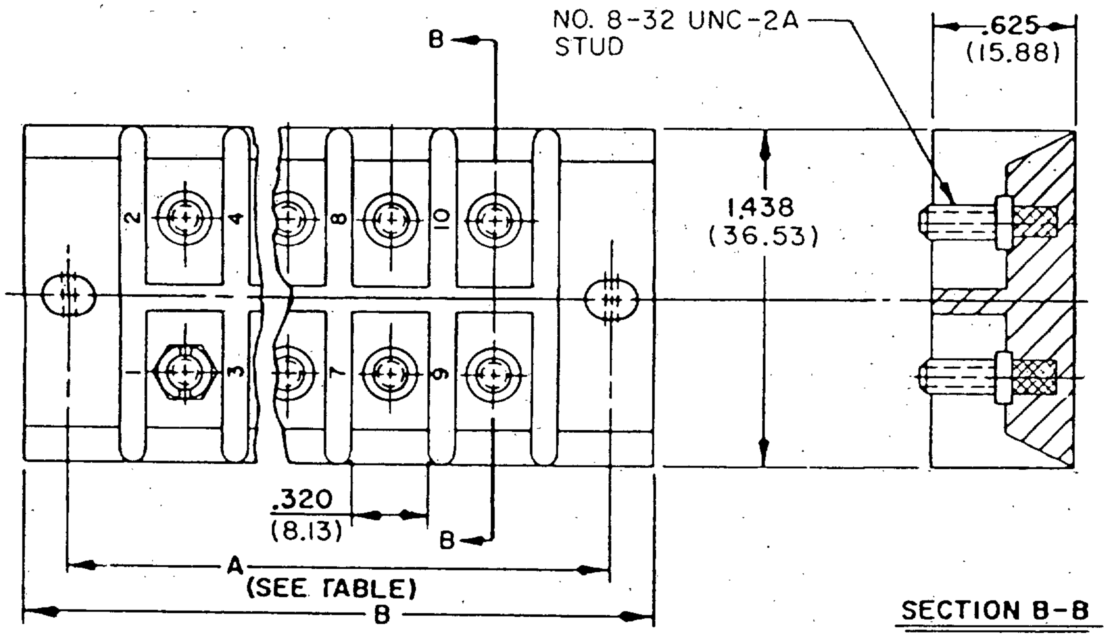

Type designation	Dimensions		Recommended wire terminal lugs MS17143(dash no.)	Maximum voltage rating	Maximum current rating
	A	B			
15TB10 15TB24	2.875(73.03) 6.000(152.40)	3.375(85.73) 6.500(165.10)	-7 -8 -9	600 volts	30 amps

Downloaded from http://www.everyspec.com

TERMINAL BOARDS, MOLDED, BARRIER,
STUD TYPE, CLASS 16TB

MIL-T-55164/20

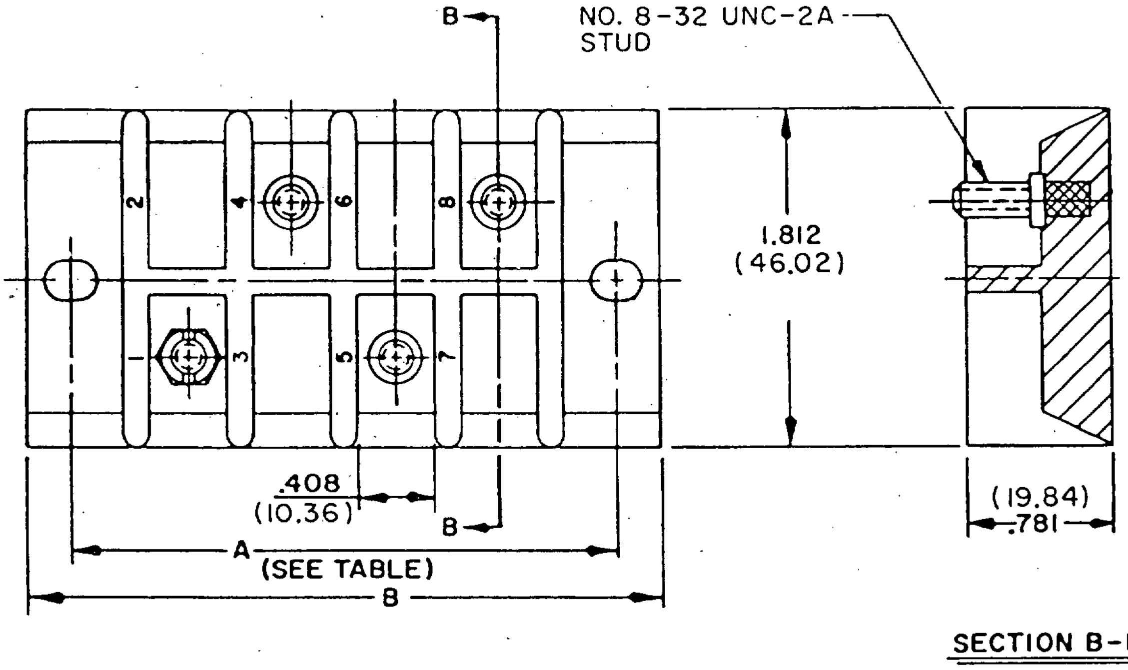

Type designation	Dimensions		Recommended wire terminal lugs MS17143(dash no.)	Maximum voltage rating	Maximum current rating
	A	B			
16TB4 16TB10	2.875(73.03) 6.000(152.40)	3.375(85.73) 6.500(165.10)	-1 -2 -3	1,000 volts	40 amps

Downloaded from http://www.everyspec.com

TERMINAL BOARDS, MOLDED, BARRIER,
STUD TYPE, CLASS 17TB

MIL-T-55164/21

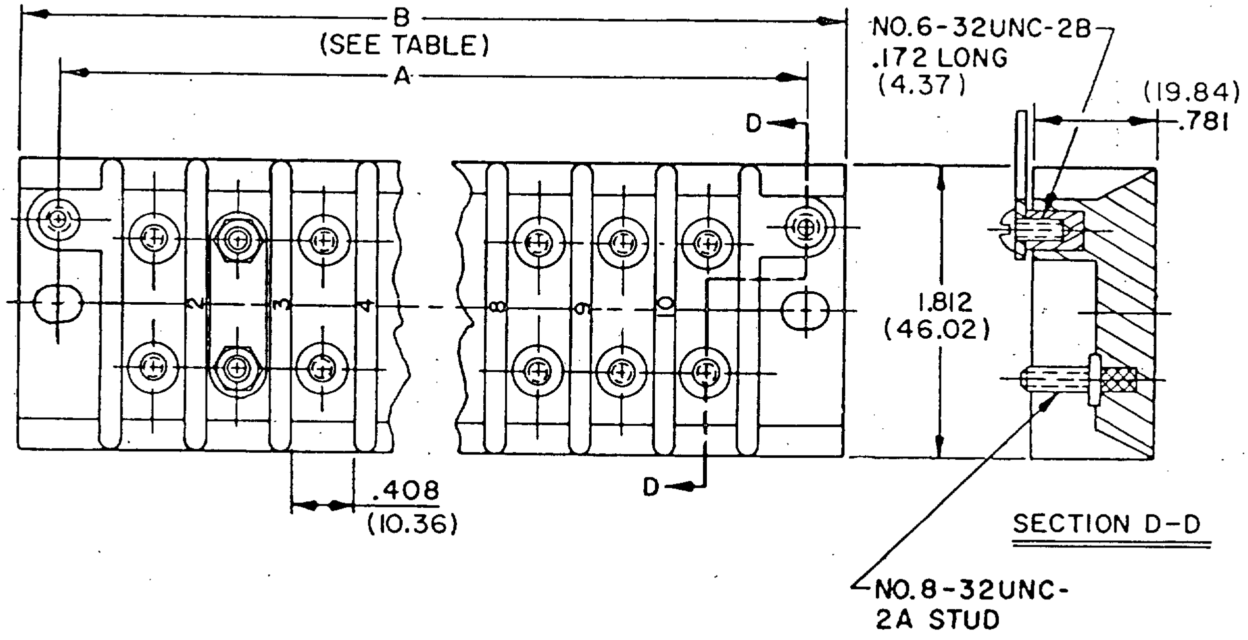

Type designation	Dimensions		Recommended wire terminal lugs MS17143(dash no.)	Maximum voltage rating	Maximum current rating
	A	B			
17TB4 17TB10	2.875(73.03) 6.000(152.40)	3.375(85.73) 6.500(165.10)	-1 -2 -3	600 volts	40 amps

Downloaded from http://www.everyspec.com

TERMINAL BOARD, MOLDED, BARRIER,
STUD TYPE, CLASS 18TB

MIL-T-55164/22

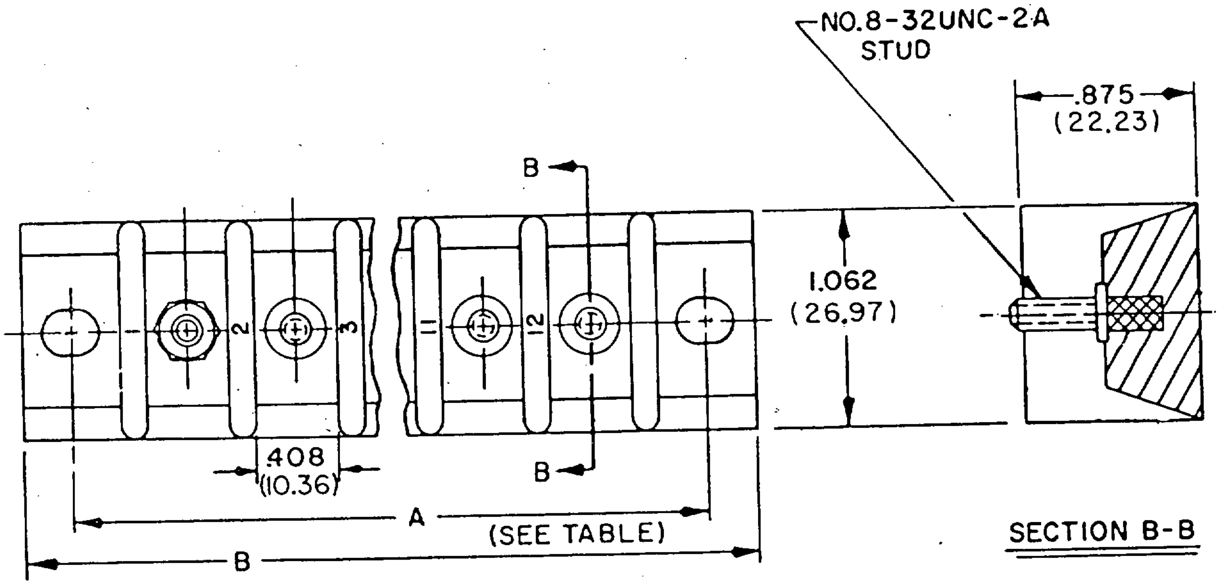

Type designation	Dimensions		Recommended wire terminal lugs MS17143(dash no.)	Maximum voltage rating	Maximum current rating
	A	B			
18TB12	7.000(177.80)	7.500(190.50)	-1 -2 -3	600 volts	45 amps

Downloaded from http://www.everyspec.com

TERMINAL BOARDS, MOLDED, BARRIER,
STUD TYPE, CLASSES 25TB AND 25TBHT

MIL-T-55164/23

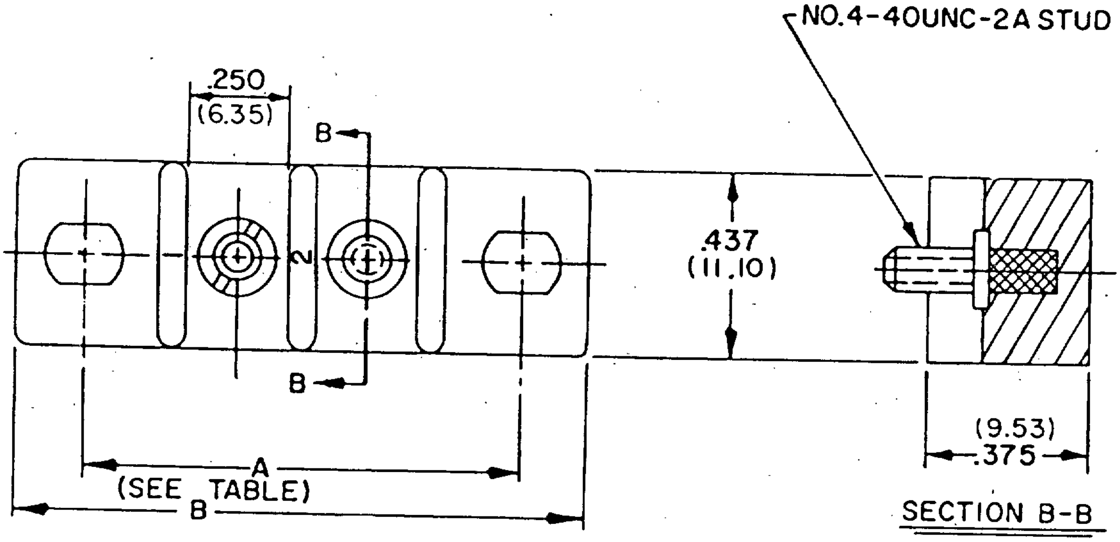

Type designation	Dimensions		Recommended wire terminal lugs MS17143(dash no.)	Maximum voltage rating	Maximum current rating
	A	B			
25TB2 25TB2HT	1.062(26.97)	1.375(34.93)	-16 -17 -18	300 volts	25 amps
25TB5 25TB5HT	2.000(50.80)	2.312(58.72)			
25TB6 25TB6HT	2.312(58.72)	2.625(66.68)			
25TB7 25TB7HT	2.625(66.68)	2.938(74.63)			
25TB9 25TB9HT	3.250(82.55)	3.562(90.47)			
25TB10 25TB10HT	3.562(90.47)	3.875(98.43)			
25TB12 25TB12HT	4.188(106.38)	4.500(114.30)			

Downloaded from http://www.everyspec.com

TERMINAL BOARDS, MOLDED, BARRIER,
STUD TYPE, CLASSES 26TB AND 26TBHT

MIL-T-55164/24

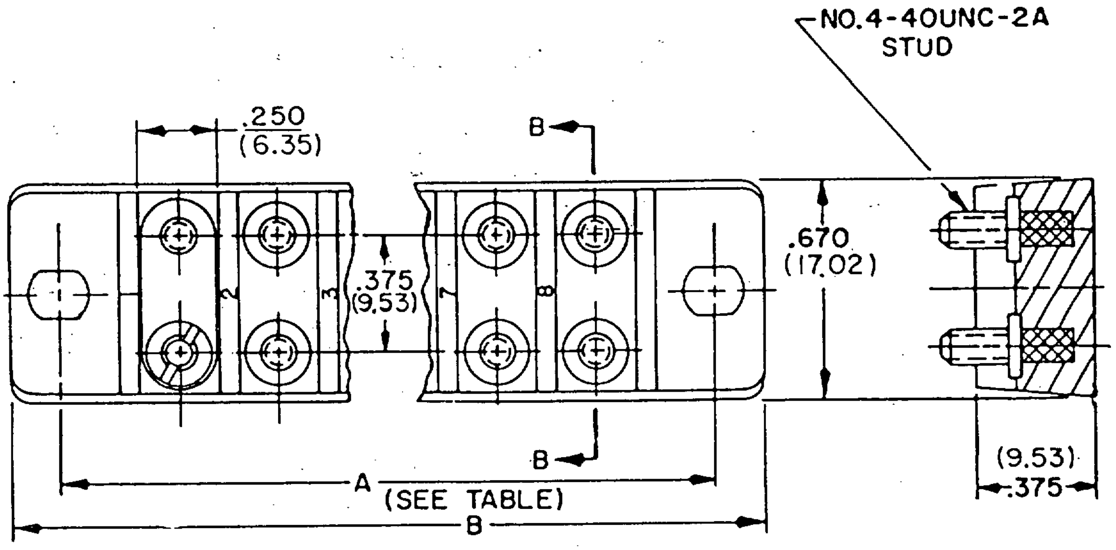

Type designation	Dimensions		Recommended wire terminal lugs MS17143(dash no.)	Maximum voltage rating	Maximum current rating
	A	B			
26TB2 26TB2HT	1.062(26.97)	1.375(34.93)	-19 -20 -21	300 volts	20 amps
26TB6 26TB6HT	2.312(58.72)	2.625(66.68)			
26TB8 26TB8HT	2.938(74.63)	3.250(82.55)			
26TB10 26TB10HT	3.562(90.47)	3.875(98.43)			
26TB12 26TB12HT	4.188(106.38)	4.500(114.30)			

Downloaded from http://www.everyspec.com

TERMINAL BOARDS, MOLDED, BARRIER,
STUD TYPE, CLASSES 27TB AND 27TBHT

MIL-T-55164/25

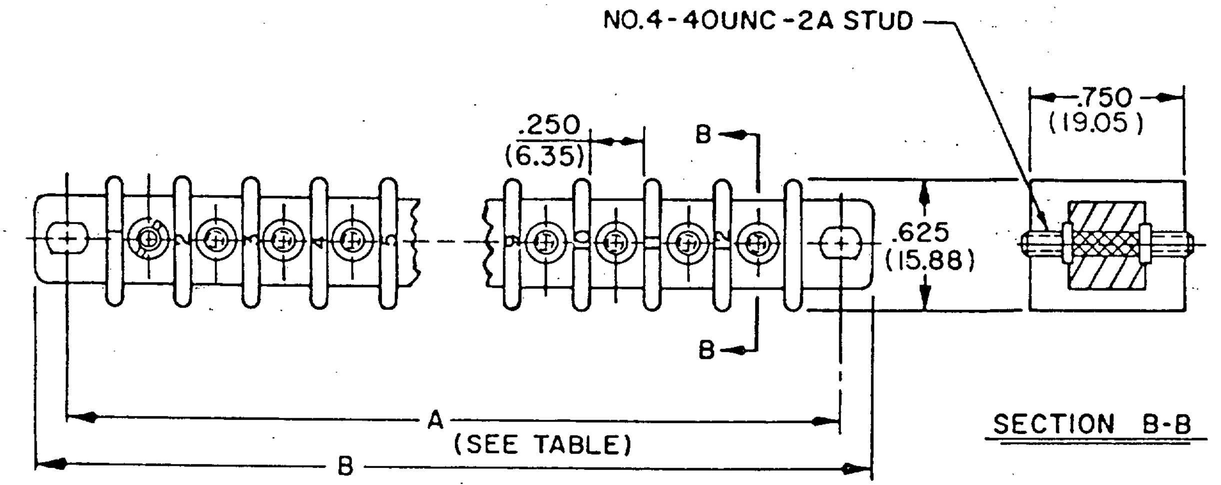

Type designation	Dimensions		Recommended wire terminal lugs MS17143(dash no.)	Maximum voltage rating	Maximum current rating
	A	B			
27TB12 27TB12HT	4.188(106.38)	4.500(114.30)	-16 -17 -18	300 volts	30 amps

Downloaded from http://www.everyspec.com

SECTION 502

TERMINAL BOARDS, MOLDED, BARRIER, SCREW TYPE, CLASS 37TB

MIL-T-55164/1

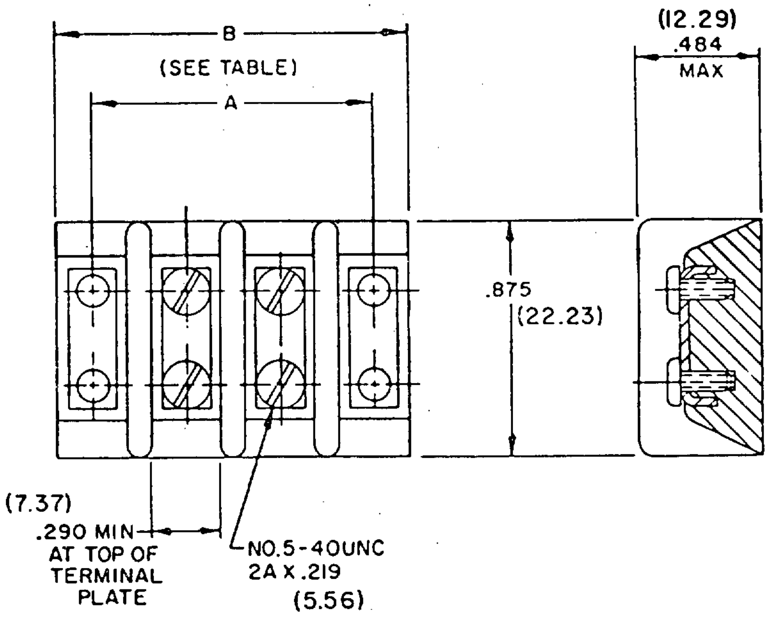

Type designation	Dimensions A	Dimensions B	MIL-T-55164 terminal lugs	Maximum voltage rating	Maximum current rating
37TB2	1.125(28.22)	1.422(36.12)	TBLD37 TBLS37	300 volts	15 amps
37TB3	1.500(38.10)	1.797(45.64)			
37TB4	1.875(47.63)	2.172(55.17)			
37TB5	2.250(57.15)	2.562(65.07)			
37TB6	2.625(66.68)	2.938(74.63)			
37TB7	3.000(76.20)	3.312(84.12)			
37TB8	3.375(85.73)	3.688(93.68)			
37TB9	3.766(95.66)	4.062(103.17)			
37TB10	4.141(105.18)	4.438(112.73)			
37TB12	4.891(124.23)	5.188(131.78)			
37TB14	5.641(143.28)	5.938(150.83)			
37TB16	6.391(162.33)	6.688(169.88)			
37TB18	7.141(181.38)	7.438(188.93)			
37TB20	7.906(200.81)	8.203(208.36)			

Downloaded from http://www.everyspec.com

TERMINAL BOARDS, MOLDED, BARRIER, SCREW TYPE, CLASS 38TB

MIL-T-55164/2

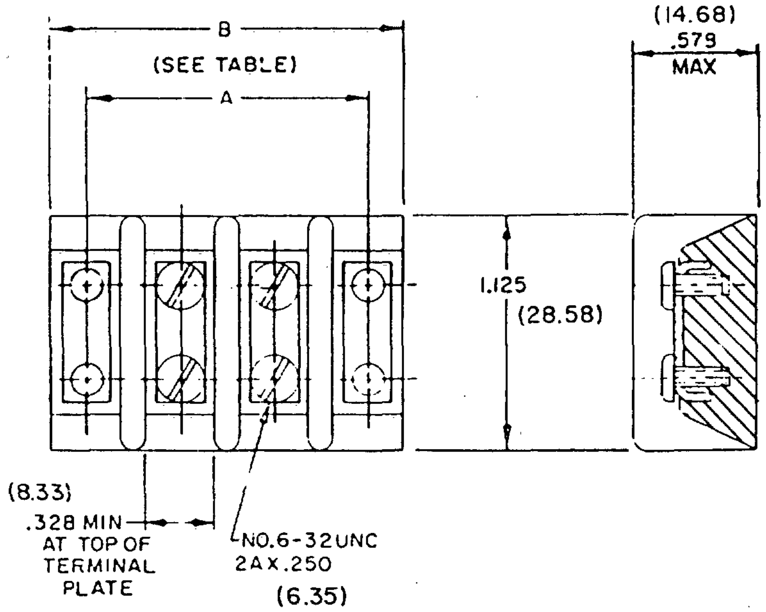

Type designation	Dimensions A	Dimensions B	MIL-T-55164 terminal lugs	Maximum voltage rating	Maximum current rating
38TB2	1.312(33.32)	1.641(41.68)			
38TB3	1.750(44.45)	2.078(52.78)			
38TB4	2.188(55.58)	2.516(63.91)			
38TB5	2.625(66.68)	2.953(75.01)			
38TB6	3.062(77.77)	3.391(86.13)			
38TB7	3.500(88.90)	3.828(97.23)			
38TB8	3.953(100.41)	4.266(108.36)	TBLD38	600	20
38TB9	4.391(111.53)	4.703(119.46)	TBLS38	volts	amps
38TB10	4.828(122.63)	5.141(130.58)			
38TB12	5.703(144.86)	6.031(153.19)			
38TB14	6.578(167.08)	6.906(175.41)			
38TB16	7.453(189.31)	7.781(197.64)			
38TB18	8.328(211.53)	8.656(219.86)			
38TB20	9.219(234.16)	9.547(242.49)			

Downloaded from http://www.everyspec.com

TERMINAL BOARDS, MOLDED, BARRIER, SCREW TYPE, CLASS 39TB

MIL-T-55164/3

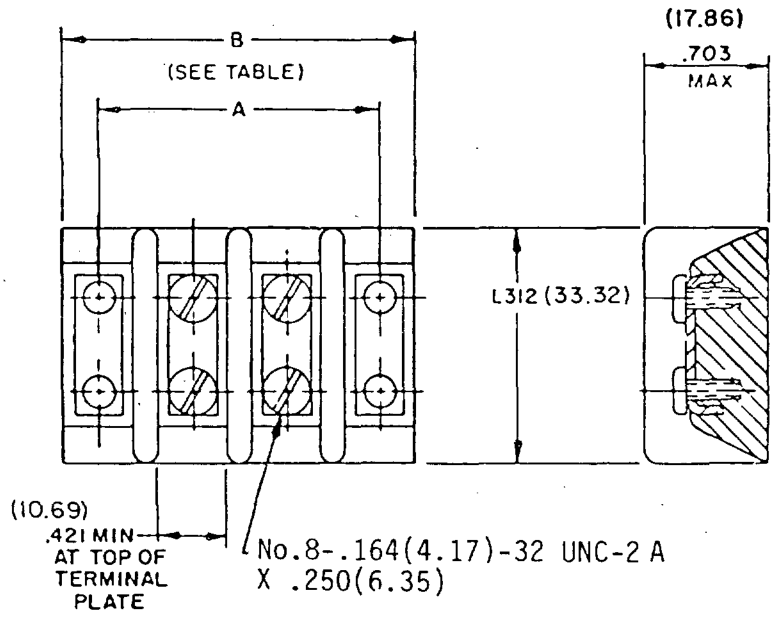

Type designation	Dimensions A	Dimensions B	MIL-T-55164 terminal lugs	Maximum voltage rating	Maximum current rating
39TB2	1.688(42.88)	2.109(53.57)	TBLD39 TBLS39	600 volts	30 amps
39TB3	2.250(57.15)	2.688(68.28)			
39TB4	2.812(71.42)	3.250(82.55)			
39TB5	3.375(85.73)	3.812(96.82)			
39TB6	3.938(100.03)	4.375(111.13)			
39TB7	4.500(114.30)	4.938(125.43)			
39TB8	5.062(128.57)	5.500(139.70)			
39TB9	5.641(143.28)	6.062(153.97)			
39TB10	6.203(157.56)	6.625(168.28)			
39TB12	7.328(186.13)	7.750(196.85)			
39TB14	8.453(214.71)	8.875(225.43)			
39TB16	9.578(243.28)	10.000(254.00)			
39TB18	10.703(271.86)	11.141(282.98)			

Downloaded from http://www.everyspec.com

TERMINAL BOARDS, MOLDED, BARRIER, SCREW TYPE, CLASS 40TB

MIL-T-55164/4

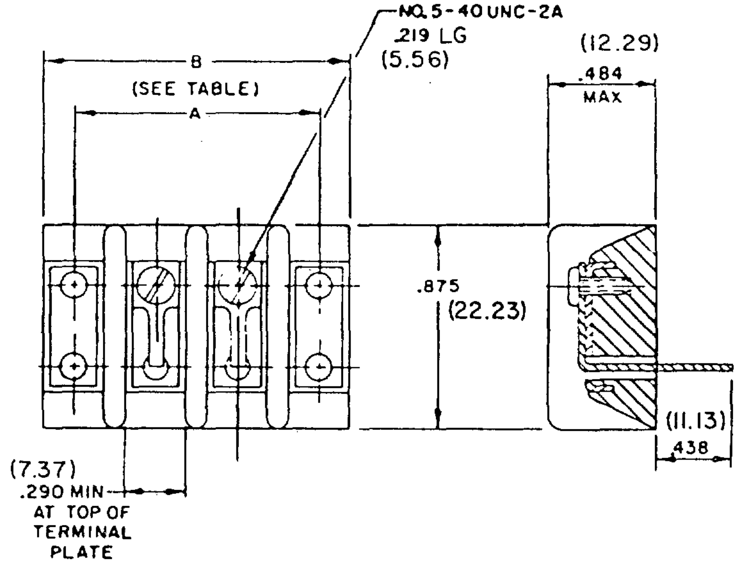

Type designation	Dimensions		Maximum voltage rating	Maximum current rating
	A	B		
40TB2	1.125(28.32)	1.422(36.12)	300 volts	7.5 amps
40TB3	1.500(38.10)	1.797(45.64)		
40TB4	1.875(47.63)	2.172(55.17)		
40TB5	2.250(57.15)	2.562(65.07)		
40TB6	2.625(66.68)	2.938(74.63)		
40TB7	3.000(76.20)	3.312(84.12)		
40TB8	3.375(85.73)	3.688(93.68)		
40TB9	3.766(95.66)	4.062(103.17)		
40TB10	4.141(105.18)	4.438(112.73)		
40TB12	4.891(124.23)	5.188(131.78)		
40TB14	5.641(143.28)	5.938(150.83)		
40TB15	6.016(152.81)	6.312(160.32)		
40TB16	6.391(162.33)	6.688(169.88)		
40TB18	7.141(181.38)	7.438(188.93)		
40TB20	7.906(200.81)	8.203(208.36)		

Downloaded from http://www.everyspec.com

TERMINAL BOARDS, MOLDED, BARRIER, SCREW TYPE, CLASS 41TB

MIL-T-55164/5

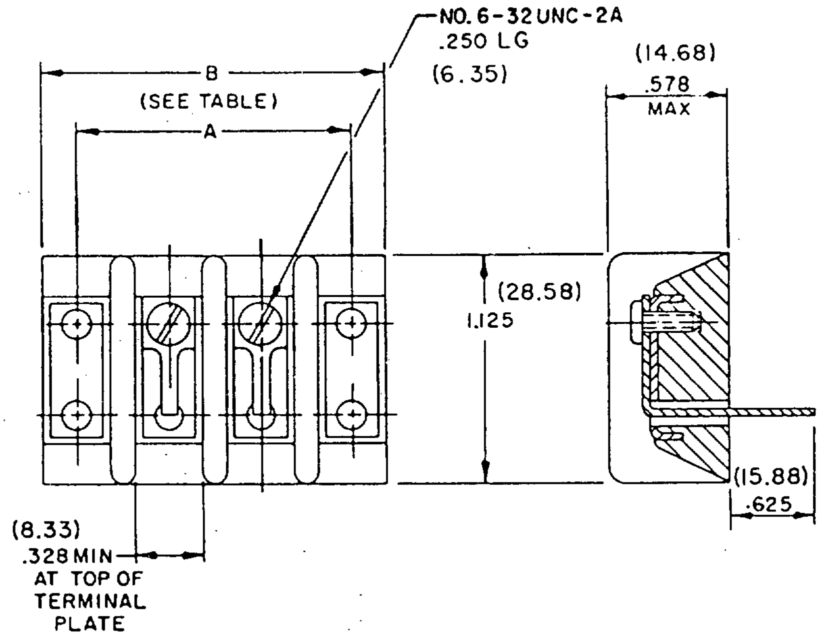

Type designation	Dimensions		Maximum voltage rating	Maximum current rating
	A	B		
41TB2	1.312(33.32)	1.641(41.68)	600 volts	10 amps
41TB3	1.750(44.45)	2.078(52.78)		
41TB4	2.188(55.58)	2.516(63.91)		
41TB5	2.625(66.68)	2.953(75.01)		
41TB6	3.062(77.77)	3.391(86.13)		
41TB7	3.500(88.90)	3.828(97.23)		
41TB8	3.953(100.41)	4.266(108.36)		
41TB9	4.391(111.53)	4.703(119.46)		
41TB10	4.828(122.63)	5.141(130.58)		
41TB12	5.703(144.86)	6.031(153.19)		
41TB14	6.578(167.08)	6.906(175.41)		
41TB16	7.453(189.31)	7.781(197.64)		
41TB18	8.328(211.53)	8.656(219.86)		
41TB20	9.219(234.16)	9.547(242.49)		

Downloaded from http://www.everyspec.com

TERMINAL BOARDS, MOLDED, BARRIER, SCREW TYPE, CLASS 43TB

MIL-T-55164/26

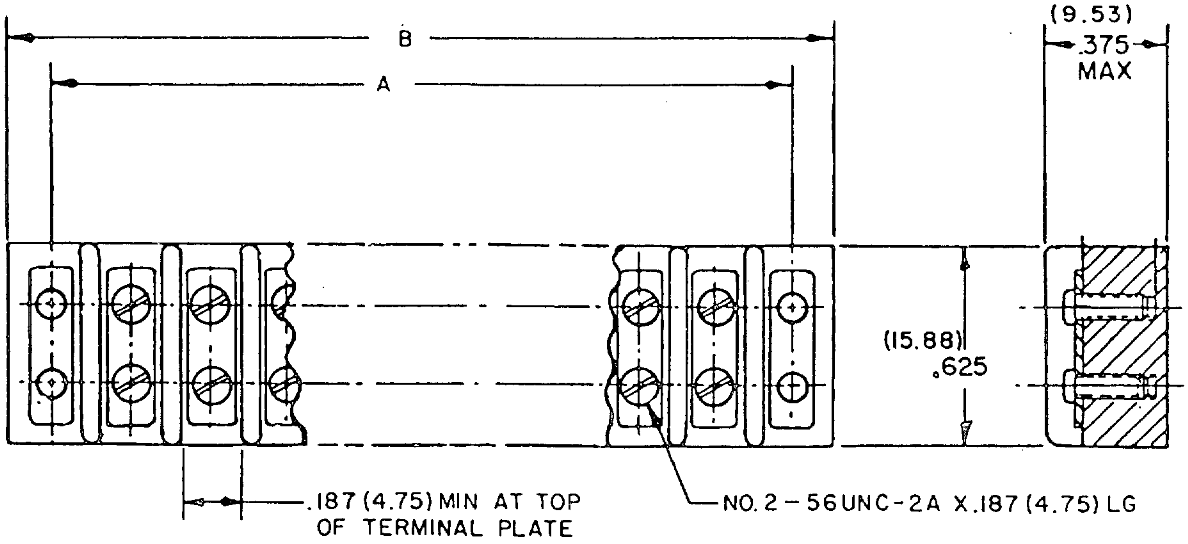

Type designation	Dimensions A	Dimensions B	Maximum voltage rating	Maximum current rating	MIL-T-55164 terminal lugs
43TB2	.750(19.05)	1.000(25.40)	150 volts	5 amps	TBLD43 TBLS43
43TB3	1.000(25.40)	1.250(31.75)			
43TB4	1.250(31.75)	1.500(38.10)			
43TB5	1.500(38.10)	1.750(44.45)			
43TB6	1.750(44.45)	2.000(50.80)			
43TB7	2.000(50.80)	2.250(57.15)			
43TB8	2.250(57.15)	2.500(63.50)			
43TB9	2.500(63.50)	2.750(69.85)			
43TB10	2.750(69.85)	3.000(76.20)			
43TB11	3.000(76.20)	3.250(82.55)			
43TB12	3.250(82.55)	3.500(88.90)			
43TB14	3.750(95.25)	4.000(101.60)			
43TB16	4.250(107.95)	4.500(114.30)			
43TB18	4.750(120.65)	5.000(127.00)			
43TB20	5.250(133.35)	5.500(139.70)			
43TB22	5.750(146.05)	6.000(152.40)			

Downloaded from http://www.everyspec.com

TERMINAL BOARDS, MOLDED, BARRIER, SCREW TYPE, CLASS 44 TB

(Applicable Specification: MIL-T-55164/27)

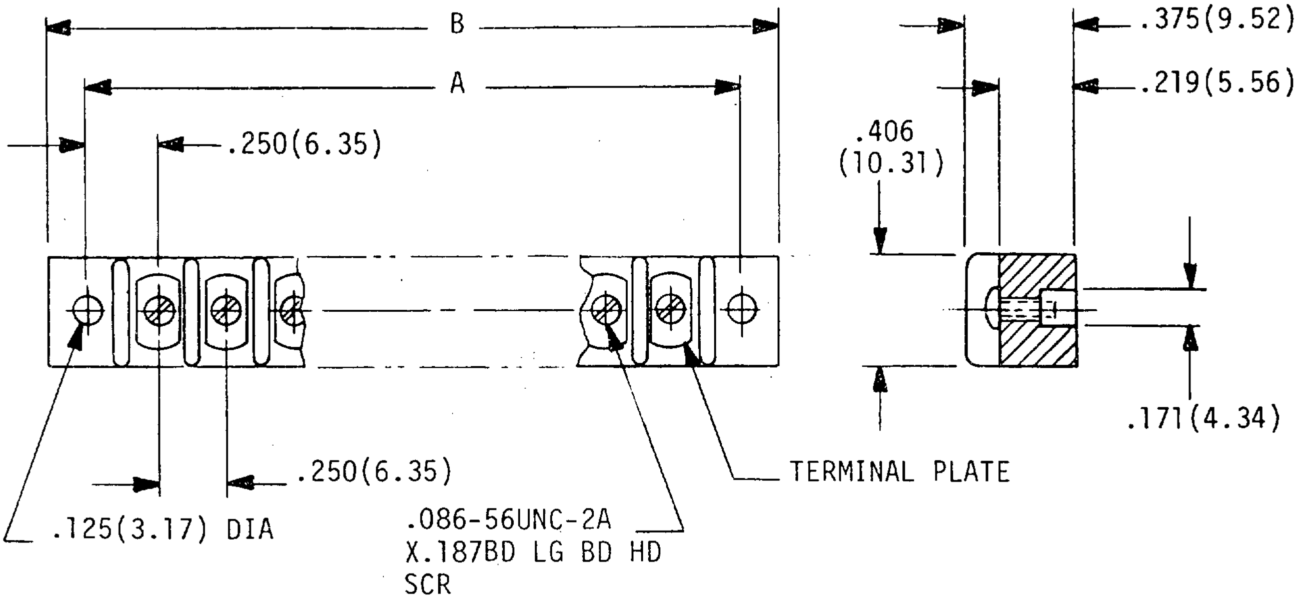

Type designation	A	B	Maximum Current Rating	MIL-T-55164 Terminal Lugs
44TB2	.750(19.05)	1.000(25.40)	5 Amps	TBLD 44 TBLS 44
44TB3	1.000(25.40)	1.250(31.75)		
44TB4	1.250(31.75)	1.500(38.10)		
44TB5	1.500(38.10)	1.750(44.45)		
44TB6	1.750(44.45)	2.000(50.80)		
44TB7	2.000(50.80)	2.250(57.15)		
44TB8	2.250(57.15)	2.500(63.50)		
44TB9	2.500(63.50)	2.750(69.85)		
44TB10	2.750(69.85)	3.000(76.20)		
44TB11	3.000(76.20)	3.250(82.55)		
44TB12	3.250(82.55)	3.500(88.90)		
44TB13	3.500(88.90)	3.750(95.25)		
44TB14	3.750(95.25)	4.000(101.60)		
44TB15	4.000(101.60)	4.250(107.95)		
44TB16	4.250(107.95)	4.500(114.30)		
44TB18	4.750(120.65)	5.000(127.00)		
44TB20	5.250(133.35)	5.500(139.70)		
44TB22	5.750(146.05)	6.000(152.40)		

Downloaded from http://www.everyspec.com

(This page left blank)

Downloaded from http://www.everyspec.com

SECTION 503

TERMINAL BOARD LUGS, STYLES TBLD and TBLS

MIL-T-5564/7D

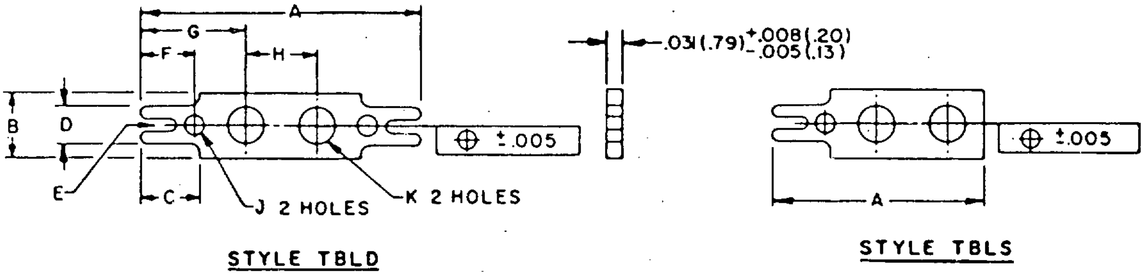

ITEM NUMBERS 37, 38, and 39

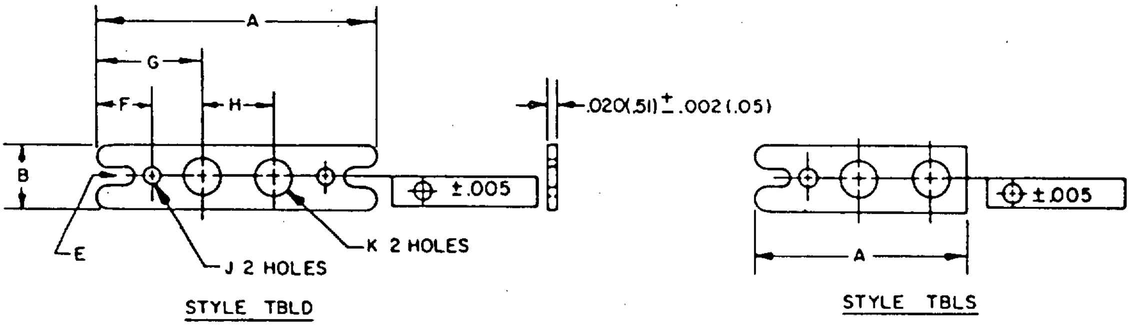

ITEM NUMBER 43

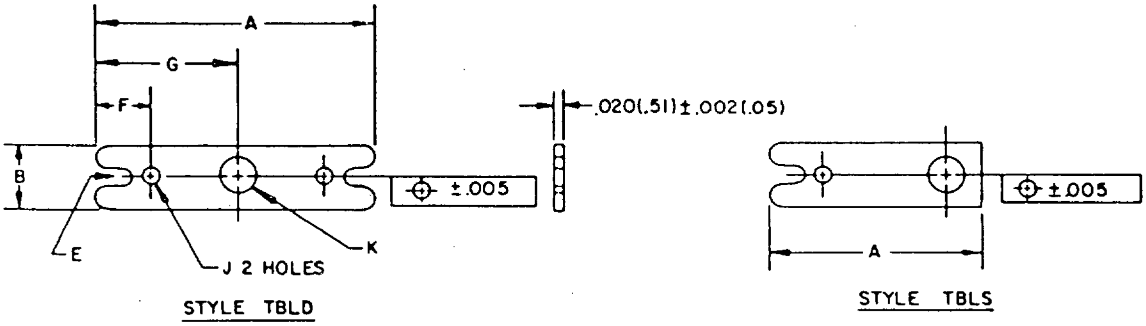

ITEM NUMBER 44

Downloaded from http://www.everyspec.com

Dimensions	Identification number				
	Item No. 37 (for class 37TB terminal boards)	Item No. 38 (for class 38TB terminal boards)	Item No. 39 (for class 39TB terminal boards)	Item No. 43 (for class 43TB terminal boards)	Item No. 44 (for class 44TB terminal boards)
A (Style TBLD)	1.219 (30.96)	1.578 (40.08)	1.859 (47.22)	1.062 (26.97)	1.031 (26.19)
A (Style TBLS)	.938 (23.83)	1.188 (30.18)	1.406 (35.71)	.812 (20.62)	.719 (18.26)
B	.287 (7.29)	.325 (8.26)	.411 (10.44)	.180 (4.57)	.180 (4.57)
C	.281 (7.14)	.375 (9.53)	.469 (11.91)	---	---
D	.156 (3.96)	.218 (5.54)	.281 (7.14)	---	---
E	.062 by .156 (1.57 by 3.96)	.062 by .219 (1.57 by 5.56)	.094 by .281 (2.39 by 7.14)	.062 by .125 (1.57 by 3.18)	.062 by .125 (1.57 by 3.18)
F	.234 (5.94)	.312 (7.92)	.391 (9.93)	.188 (4.78)	.188 (4.78)
G	.453 (11.51)	.578 (14.68)	.680 (17.27)	.406 (10.31)	.516 (13.11)
H	.312 (7.92)	.421 (10.69)	.500 (12.70)	.250 (6.35)	---
J (dia)	.093 (2.36)	.125 (3.18)	.125 (3.18)	.062 (1.57)	.062 (1.57)
K (dia)	.146 (3.71)	.152 (3.86)	.187 (4.75)	.093 (2.36)	.093 (2.36)

NOTES:
1. Dimensions are in inches.
2. Millimeters are in parentheses.
3. Metric equivalents (to the nearest .01 mm) are given for general information only and are based upon 1 inch = 25.4 mm.
4. Tolerances are as follows: Dimensions A and C thru G, ±.016 (0.41). Dimensions B, H, J, and K, ±.005 (0.13), except for items 43 and 44, the tolerance shall be ±.006 (0.15) for B and ±.007 (0.18) for K.
5. Drawing depicts only general design characteristics and is not intended to limit specific manufacturing processes.

Downloaded from http://www.everyspec.com

SECTION 504

TERMINAL BOARD ASSEMBLY, MOLDED-IN STUD, ELECTRIC

MS27212

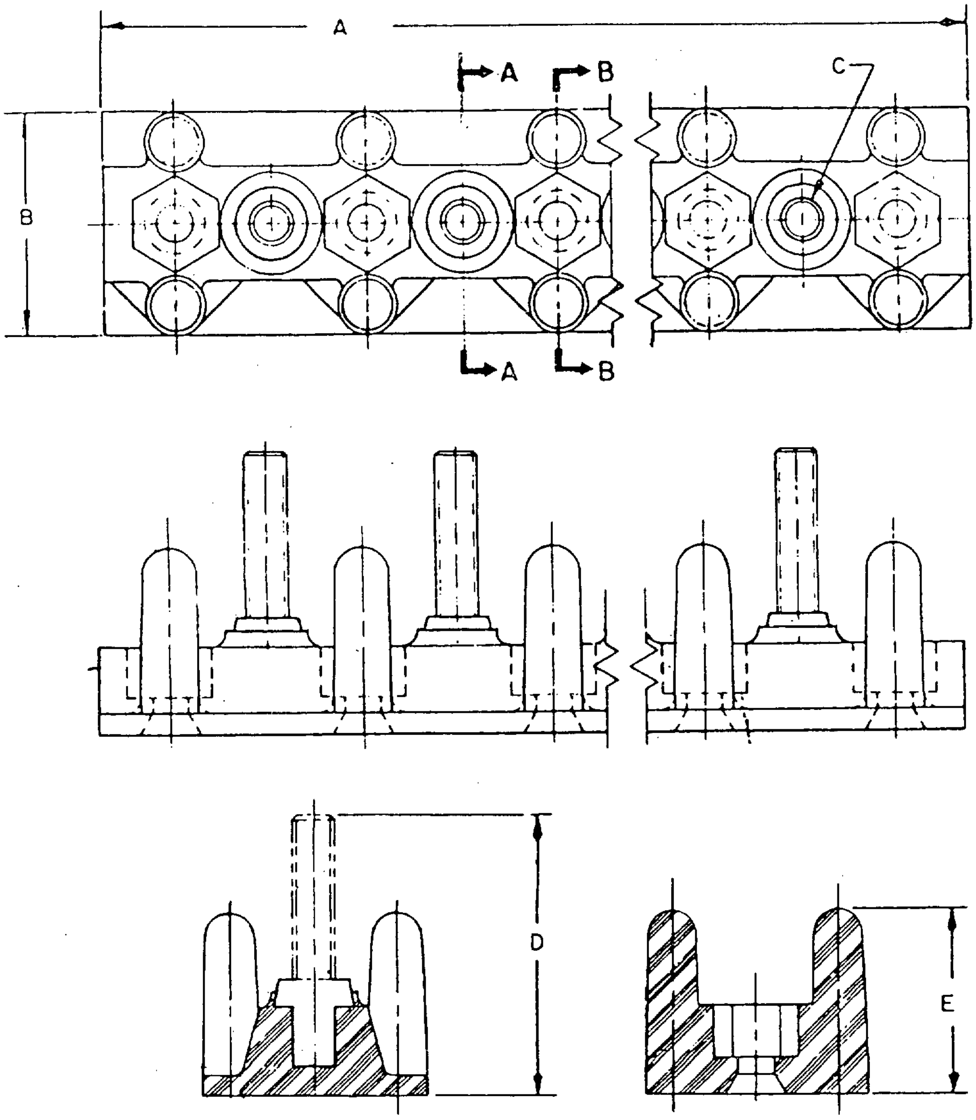

SECTION A-A SECTION B-B

Part number	A max. ref	B	C	D max	E	Number of studs
MS27212-1-20	12.334 (313.28)	.688 (17.48)	#6-32UNC-2A	.953 (24.21)	.580 (14.73)	20
MS27212-2-16	12.454 (316.33)	.938 (23.83)	#10-32UNF-2A	1.079 (27.41)	.789 (20.04)	16

Downloaded from http://www.everyspec.com

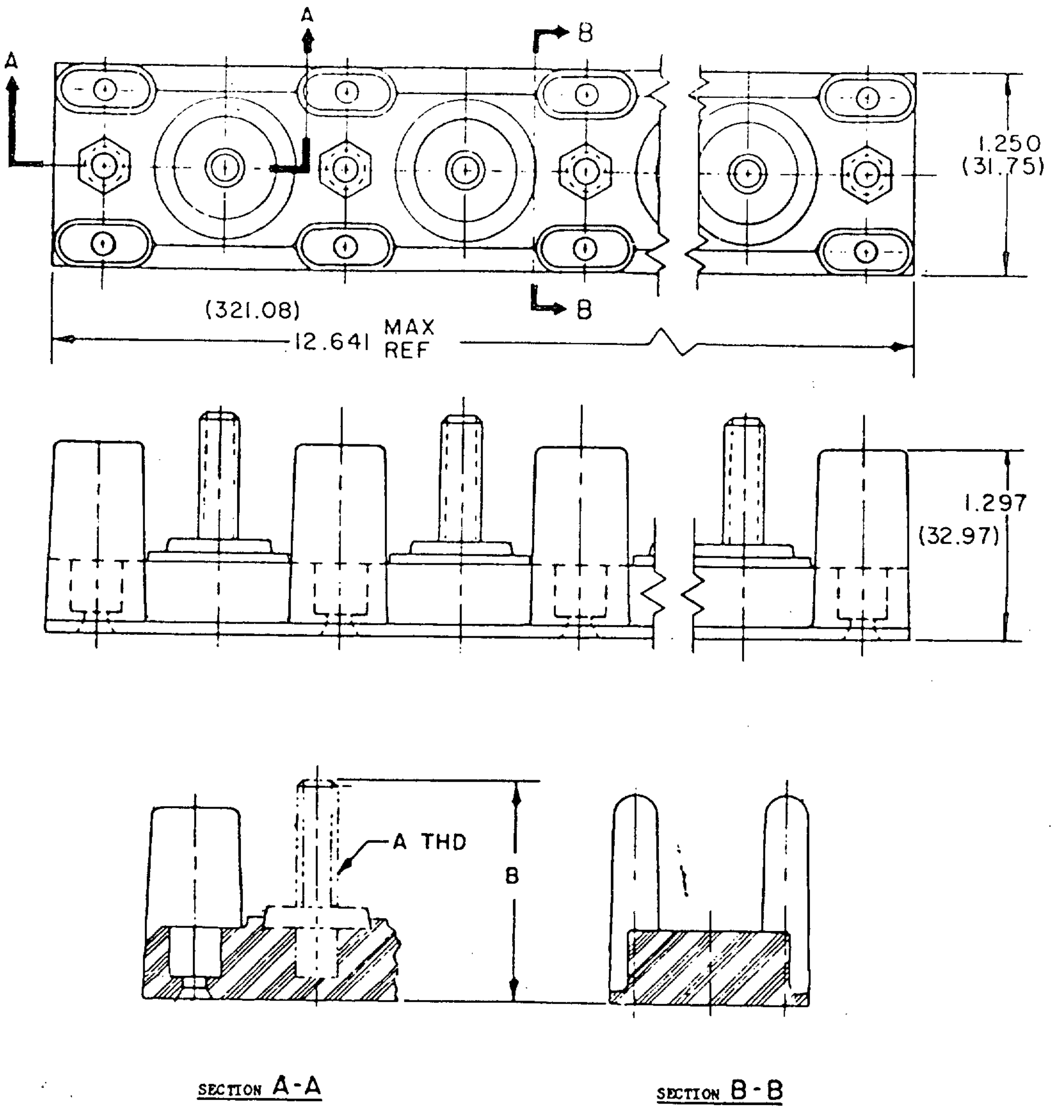

Part number	A	B	Number of studs
MS27212-3-8	1/4-28UNF-2A	1.321(33.55)	8
MS27212-4-8	5/16-24UNF-2A	1.392(35.36)	8
MS27212-5-8	3/8-24UNF-2A	1.517(38.53)	8

Downloaded from http://www.everyspec.com

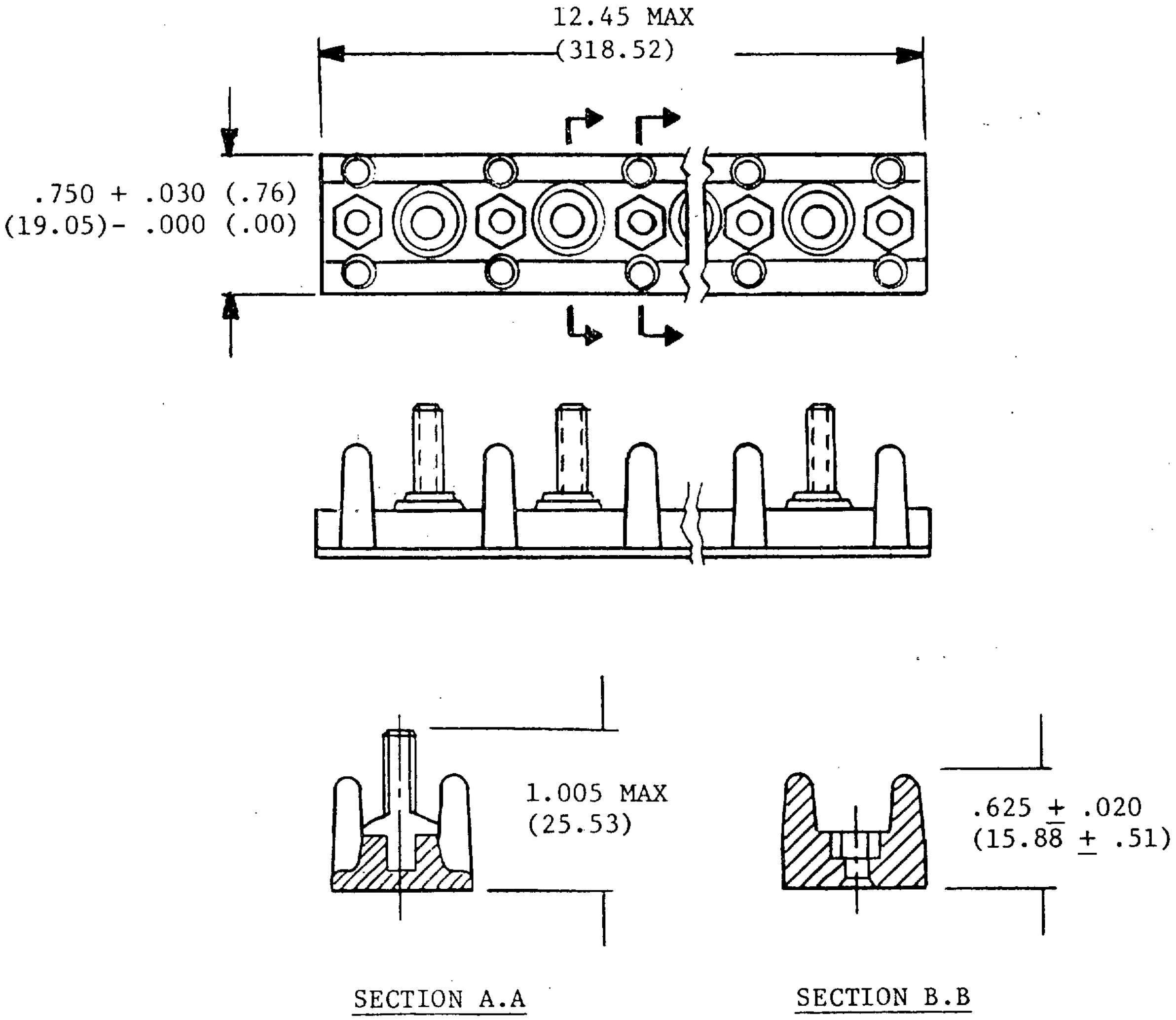

Part number	Number of studs
MS27212-6-16	16

Downloaded from http://www.everyspec.com

(This page left blank)

Downloaded from http://www.everyspec.com

SECTION 505

TERMINAL BOARD JUMPERS, STYLES TBJA, TBJB, TBJC, TBJD TBJE, TBJF, AND TBJG

(Applicable Specification: MIL-T-55164/28)

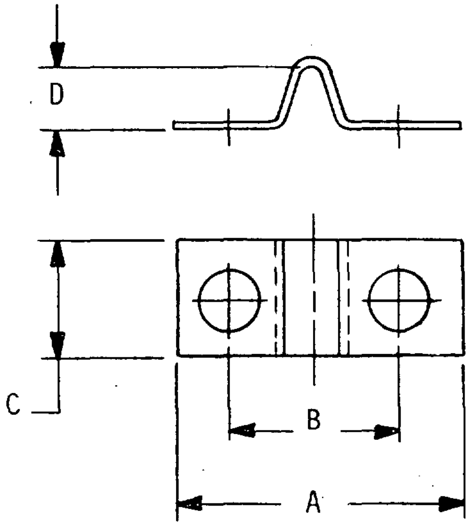

STYLE	A	B	C	D
TBJA	.650(16.51)	.375 (9.52)	.250(6.35)	.130(3.30)
TBJB	.750(19.05)	.437 (11.10)	.310(7.87)	.150(3.81)
TBJC	.930(23.62)	.562 (14.27)	.370(9.40)	.240(6.10)

Downloaded from http://www.everyspec.com

STYLE TBJE

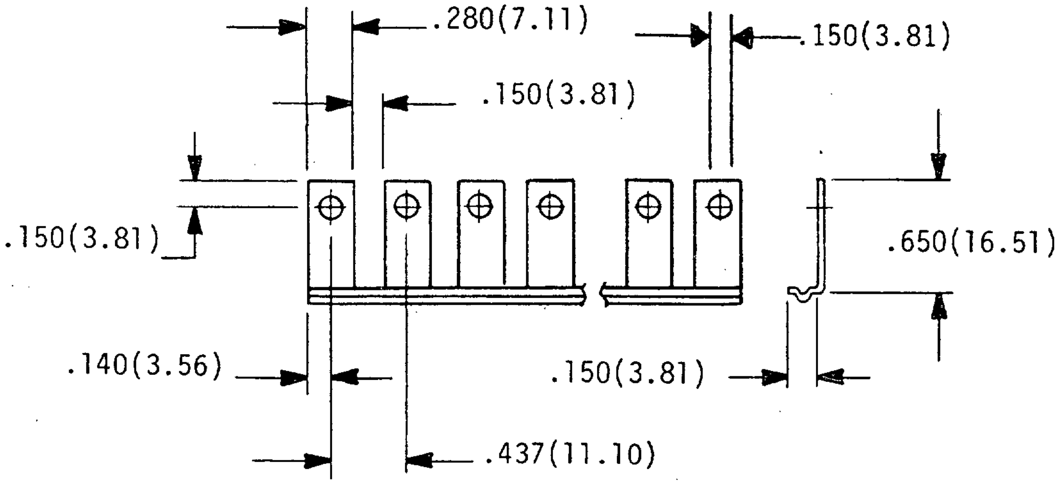

MAX. NO. OF SECTIONS
23

STYLE TBJG

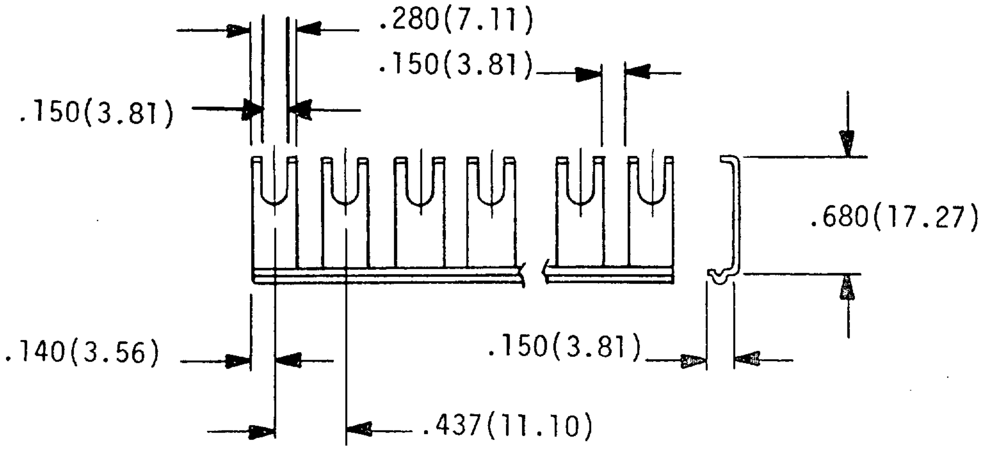

MAX. NO. OF SECTIONS
23

Downloaded from http://www.everyspec.com

STYLE TBJD

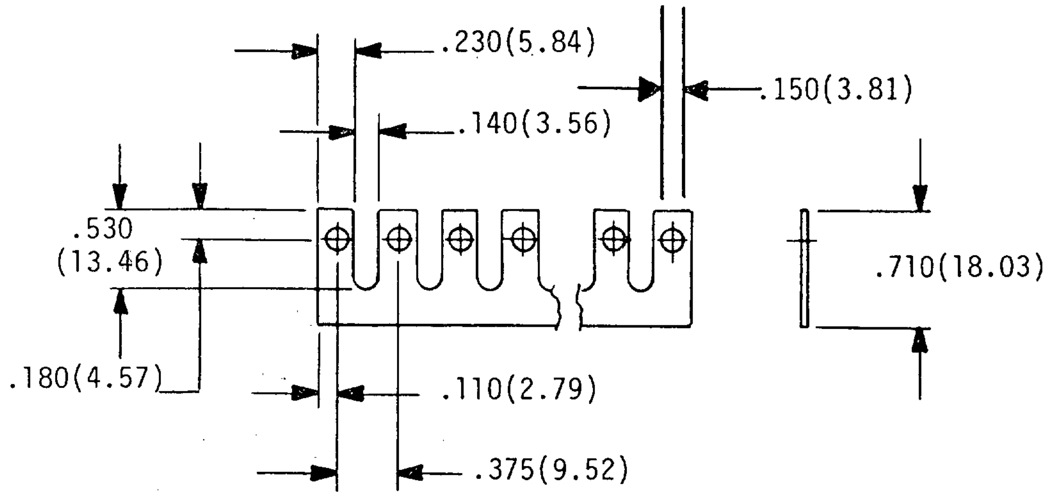

MAX. NO. OF SECTIONS
22

STYLE TBJF

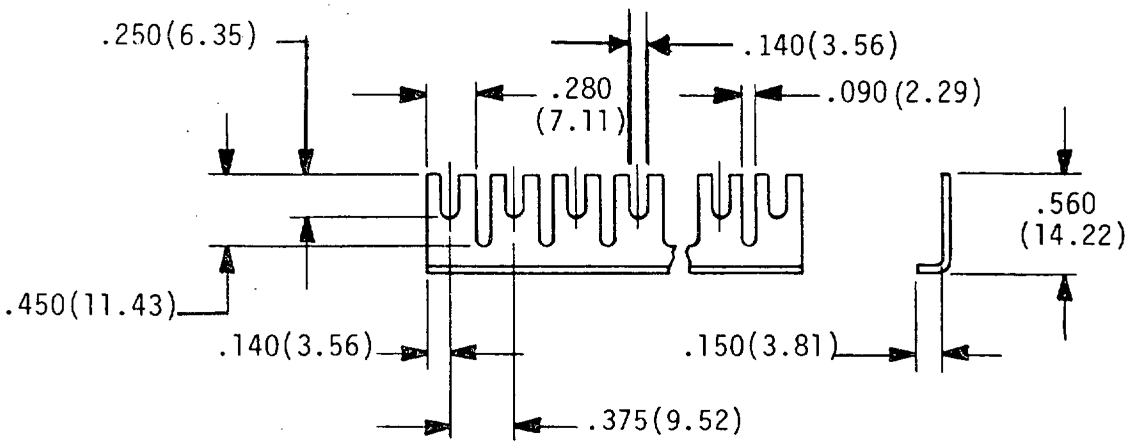

MAX NO. OF SECTIONS
22

Downloaded from http://www.everyspec.com

(This page left blank)

Downloaded from http://www.everyspec.com

SECTION 600

POSTS, BINDING

Section		Applicable document
601	Posts, Binding (Insulated), Types PB01FA01 to PB01FA04, inclusive	MIL-P-55149
602	Posts, Binding (Noninsulated)	MIL-P-55149
603	Posts, Binding, Waterproof (Insulated)	MIL-P-55149

Downloaded from http://www.everyspec.com

(This page left blank)

Downloaded from http://www.everyspec.com

SECTION 601

POSTS, BINDING (INSULATED),
TYPES PB01FA01 TO PB01FA04, INCLUSIVE

MIL-P-55149/1

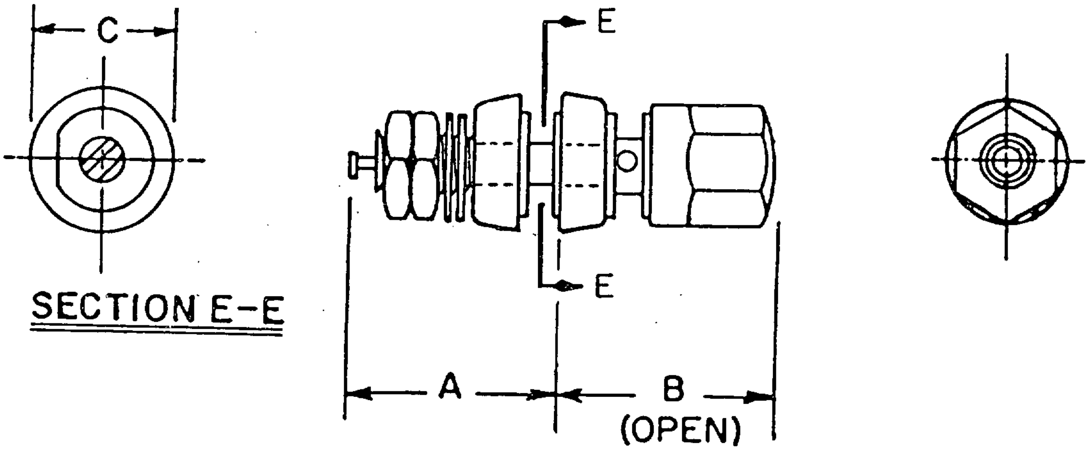

<table>
<tr><th rowspan="2">Type designation</th><th rowspan="2">Insulation color</th><th colspan="3">Dimensions</th><th rowspan="2">Mounting board thickness</th></tr>
<tr><th>A</th><th>B max</th><th>C</th></tr>
<tr><td>PB01FA01</td><td>red</td><td rowspan="2">0.690
(17.53)</td><td rowspan="2">1.035
(26.29)</td><td rowspan="2">0.500
(12.70)</td><td rowspan="2">.062 to .188
(1.57) to (4.78)</td></tr>
<tr><td>PB01FA02</td><td>black</td></tr>
<tr><td>PB01FA03</td><td>red</td><td rowspan="2">0.870 min
(22.10)
0.910 max
(23.11)</td><td rowspan="2">1.187
(30.15)</td><td rowspan="2">0.640
(16.26)</td><td rowspan="2">.062 to .250
(1.57) to (6.35)</td></tr>
<tr><td>PB01FA04</td><td>black</td></tr>
</table>

Downloaded from http://www.everyspec.com

(This page left blank)

Downloaded from http://www.everyspec.com

SECTION 602

POSTS, BINDING (NONINSULATED),
TYPES PB02DC01 AND PB02DC02

MIL-P-55149/2

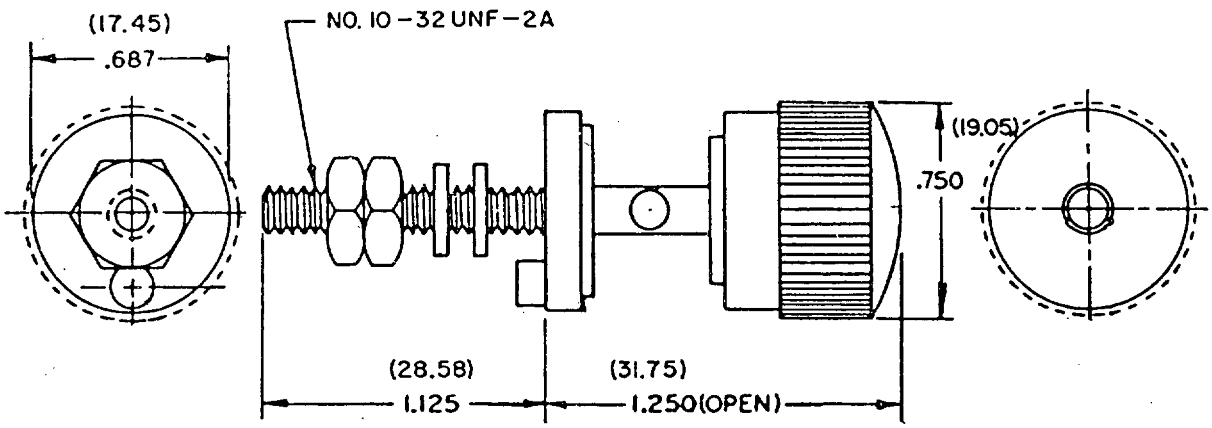

Type designation	Insulation color	Used on panel thickness
PB02DC01	red	.062 min (1.57)
PB02DC02	black	.062 min (1.57)

Downloaded from http://www.everyspec.com

POSTS, BINDING (NONINSULATED),
TYPES PB03KC01 AND PB03KC02

MIL-P-55149/3

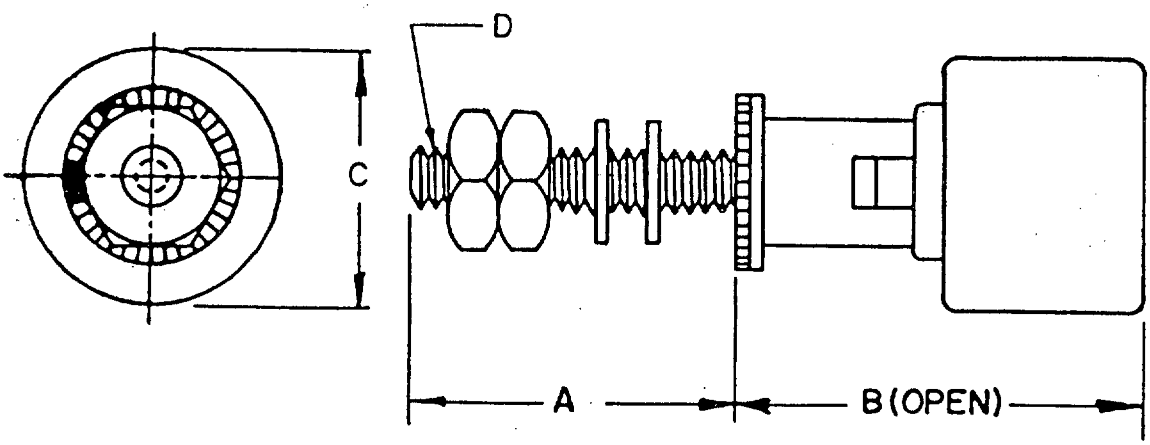

Type designation	Insulation color	Dimensions			
		A	B	C	D
PB03KC01	black	.562 (14.27)	.734 (18.64)	.500 (12.70)	#6-32UNC-2A
PB03KC02	black	.812 (20.62)	.938 (23.82)	.625 (15.88)	#8-32UNC-2A

Downloaded from http://www.everyspec.com

POSTS, BINDING (NONINSULATED),
TYPE PB05NC01

MIL-P-55149/5

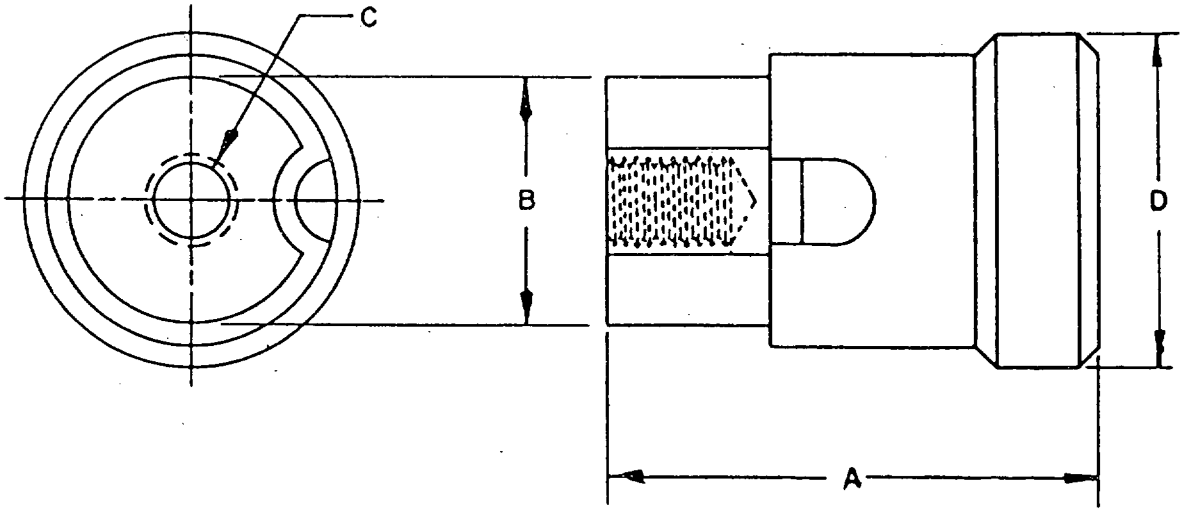

Type designation	Insulation color	Dimensions			
		A max	B	C	D
PB05NC01	black	.750 (19.05)	.375 (9.53)	#6-32UNC-2B	.500 (12.70)

Downloaded from http://www.everyspec.com

POST, BINDING (NONINSULATED),
TYPE PB06NC01

MIL-P-55149/6

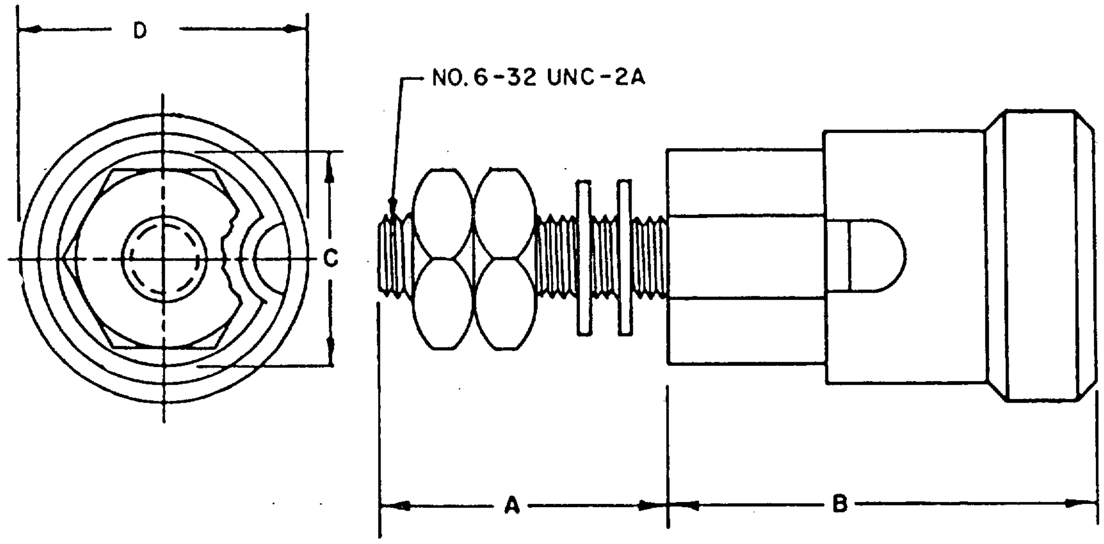

Type designation	Insulation color	Dimensions			
		A	B max	C	D
PB06NC01	black	.500 (12.70)	.750 (19.05)	.375 (9.53)	.500 (12.70)

Downloaded from http://www.everyspec.com

SECTION 603

POST, BINDING, WATERPROOF (INSULATED),
TYPE PB07FA01

MIL-P-55149/7

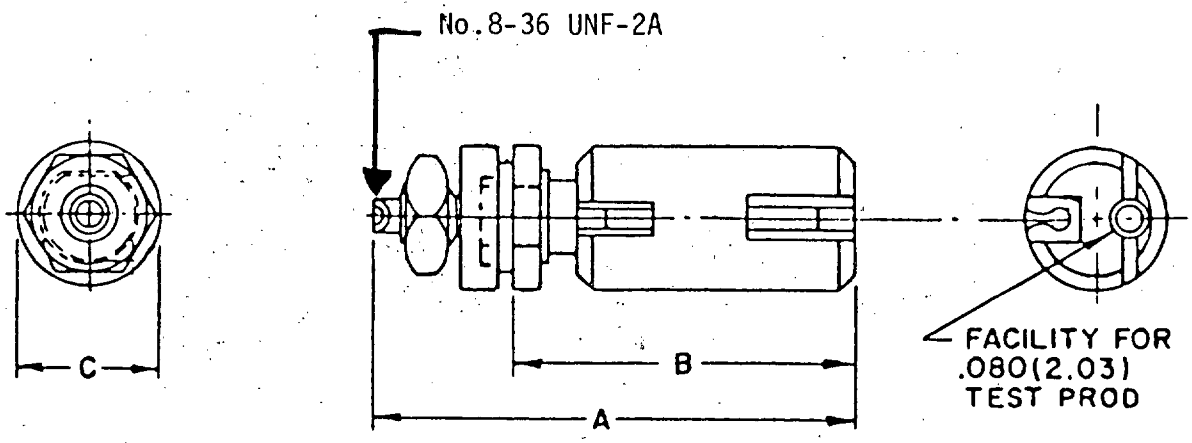

Type designation	Insulation color	Dimensions			Mounting board thickness
		A max	B max	C max dia	
PB07FA01	olive drab	1.612 (40.94)	1.072 (27.23)	.400 (10.16)	.062 to .125 (1.57) to (3.18)

Downloaded from http://www.everyspec.com

POST, BINDING, WATERPROOF (INSULATED),
TYPES PB08NA01 AND PB08NA02

MIL-P-55149/8

(NOT FOR USE IN AIR FORCE AIRBORNE EQUIPMENT)

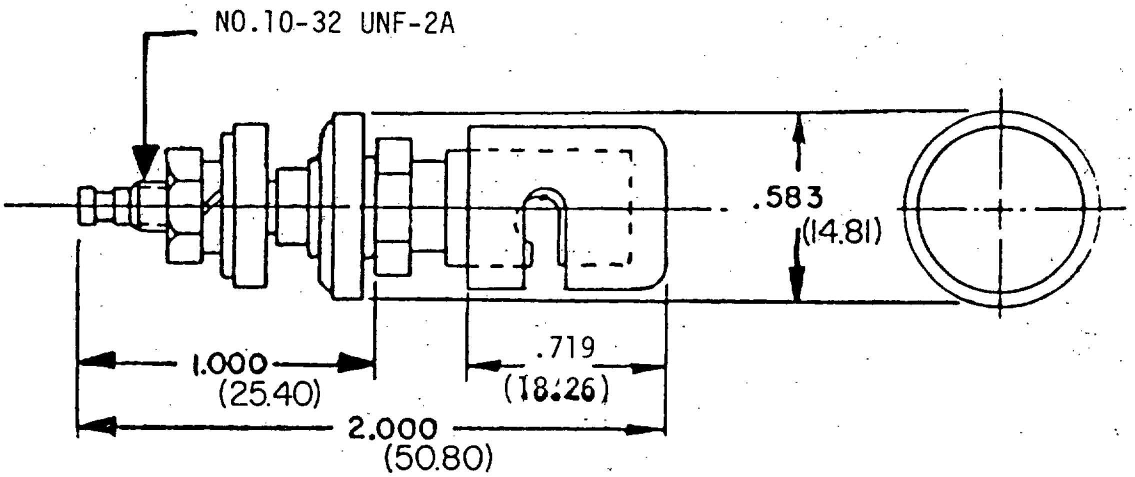

Type designation	Cap color
PB08NA01	black
PB08NA02	red

Downloaded from http://www.everyspec.com

POST, BINDING, WATERPROOF AND NONWATERPROOF (UNINSULATED) TYPES PB09NC01 TO PB09NC07, INCLUSIVE

MIL-P-55149

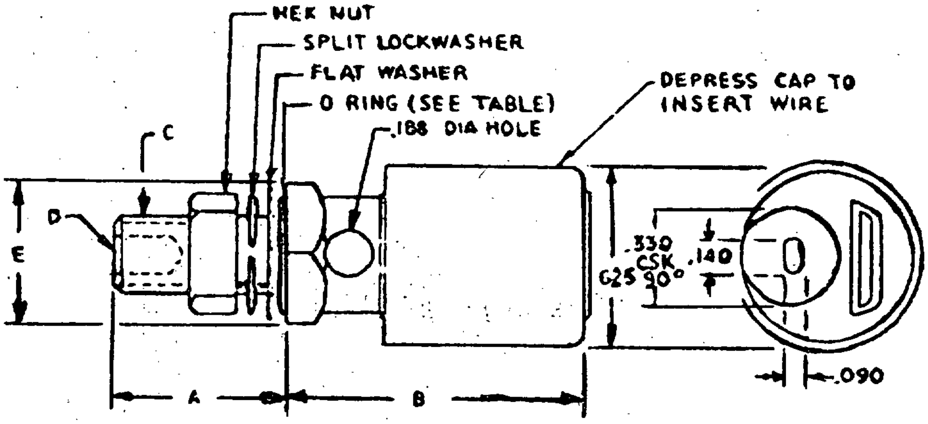

Type designation	A	B ref	C	D	E
PB09NC01	.406	1.065	.250-28 UNF-2A	NO. 8-32 UNC-2B x .250	.500
PB09NC02	.625	1.074		No thread	
PB09NC03	.720	1.074	No.10-32 UNF-2A		
PB09NC04	.900	1.065			
PB09NC05 *	.509	1.065	.250-28- UNF-2A		.438
PB09NC06 *	.720	1.074	No.10-32 UNF-2A		.500
PB09NC07	.509	1.065		No. 8-32 UNC-2B x .250	

* Non-waterproof. All other types are waterproof and require an "O"-ring and groove.

CAP COLOR: NATURAL.

INCHES	MM	INCHES	MM
.090	2.29	.500	12.70
.140	3.56	.509	12.93
.189	4.80	.625	15.88
.250	6.35	.720	18.29
.330	8.38	.900	22.86
.406	10.31	1.065	27.05
.438	11.13	1.074	27.28

Downloaded from http://www.everyspec.com

(This page left blank)

Downloaded from http://www.everyspec.com

SECTION 700

TERMINAL JUNCTION SYSTEMS

Section		Applicable Document
701	Terminal Junction Systems, Module, Feedback Type	MIL-T-81714
702	Terminal Junction Systems, Module, Feedthru Type	MIL-T-81714
703	Terminal Junction Systems, Track, Feedback Type	MIL-T-81714
704	Terminal Junction Systems, Track, Feedthru Type	MIL-T-81714
705	Terminal Junction Systems, Splice	MIL-T-81714
706	Terminal Junction Systems, Terminal, Grounding	MIL-T-81714
707	Terminal Junction Systems, Bracket Module Mounting	MIL-T-81714

Downloaded from http://www.everyspec.com

(This page left blank)

Downloaded from http://www.everyspec.com

SECTION 701

TERMINAL JUNCTION SYSTEMS, MODULE, FEEDBACK TYPE, SIZE 22

MIL-T-81714/1

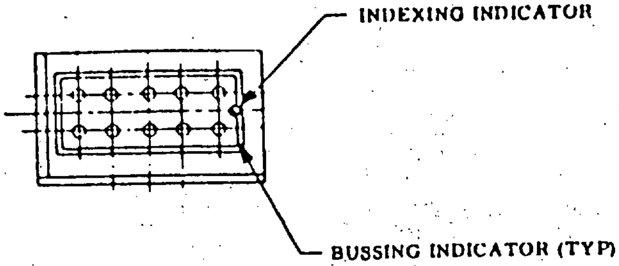

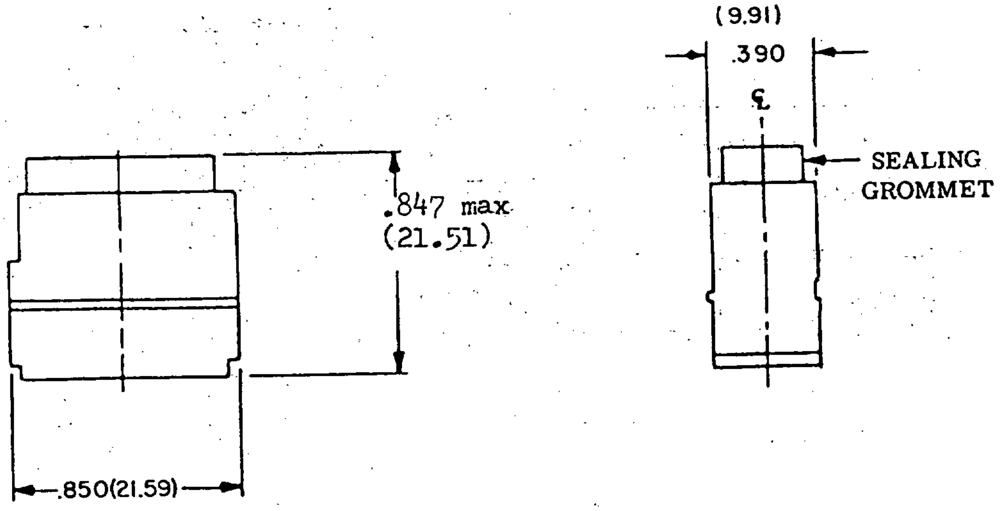

Part number	Color	Cond size
M81714/1-A*	green	26-24-22
M81714/1-B*	red	26-24-22
M81714/1-C*	black	26-24-22

The * in the above table shall be replaced by a bussing arrangement designator in accordance with MIL-T-81714/1.

(Inactive for New Design for Air Force Use)

Downloaded from http://www.everyspec.com

TERMINAL JUNCTION SYSTEMS, MODULE, FEEDBACK TYPE, SIZE 20

MIL-T-81714/2

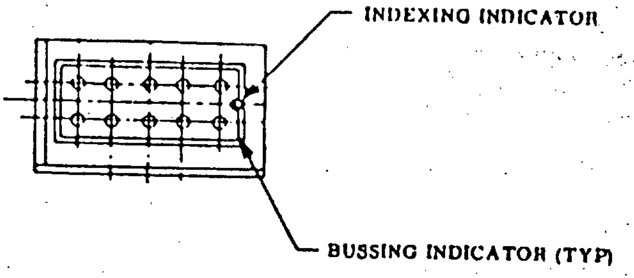

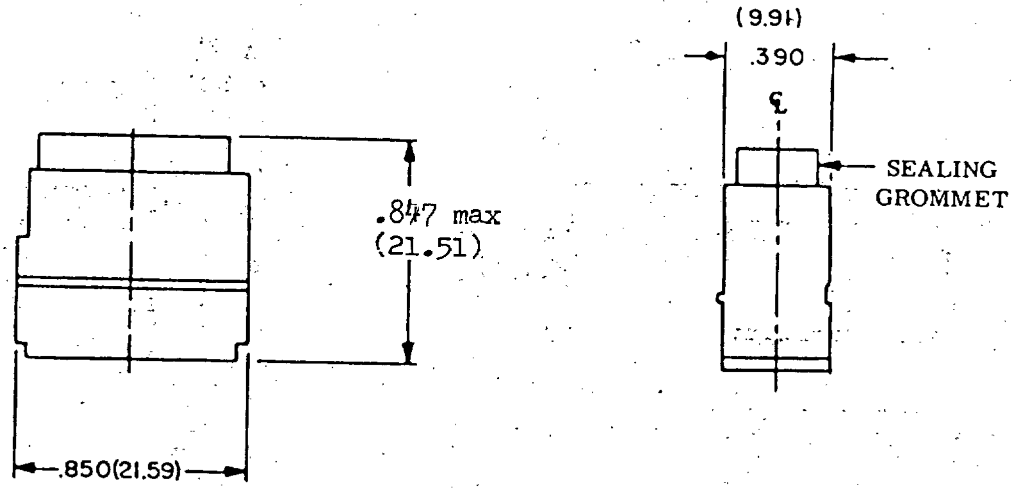

Part number	Color	Cond size
M81714/2-A*	green	24-22-20
M81714/2-B*	red	24-22-20
M81714/2-C*	black	24-22-20

The * in the above table shall be replaced by a bussing arrangement designator in accordance with MIL-T-81714/2.

(Inactive for New Design for Air Force Use)

Downloaded from http://www.everyspec.com

TERMINAL JUNCTION SYSTEMS, MODULE,
FEEDBACK TYPE, SIZE 16

MIL-T-81714/3

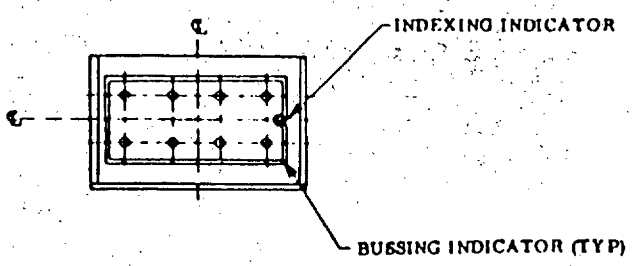

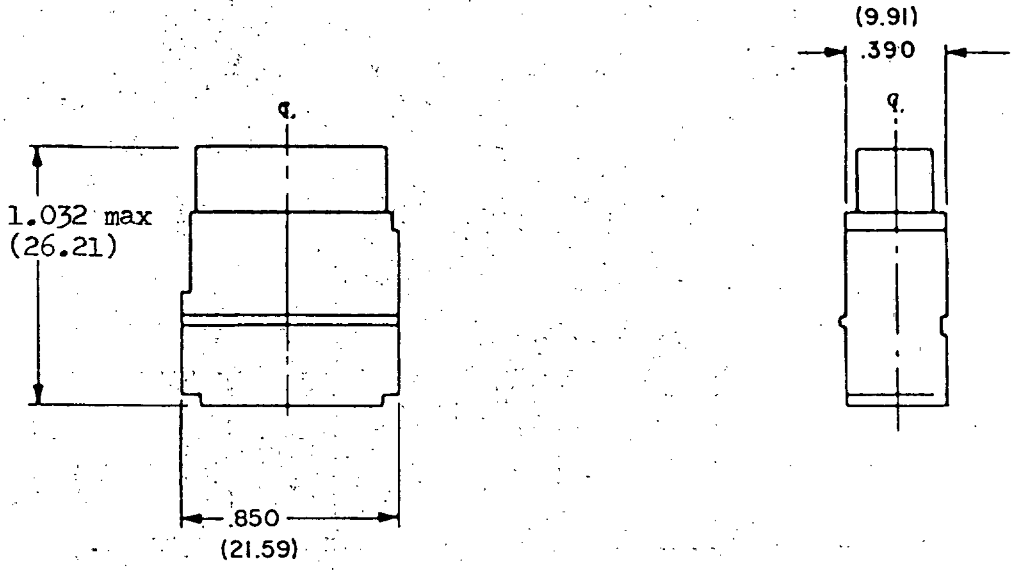

Part number	Color	Cond size
M81714/3-A*	green	20-18-16
M81714/3-B*	red	20-18-16
M81714/3-C*	black	20-18-16

The * in the above table shall be replaced by a bussing arrangement designator in accordance with MIL-T-81714/3.

(Inactive for New Design for Air Force Use)

Downloaded from http://www.everyspec.com

TERMINAL JUNCTION SYSTEMS, MODULE,
FEEDBACK TYPE, SIZE 12

MIL-T-81714/4

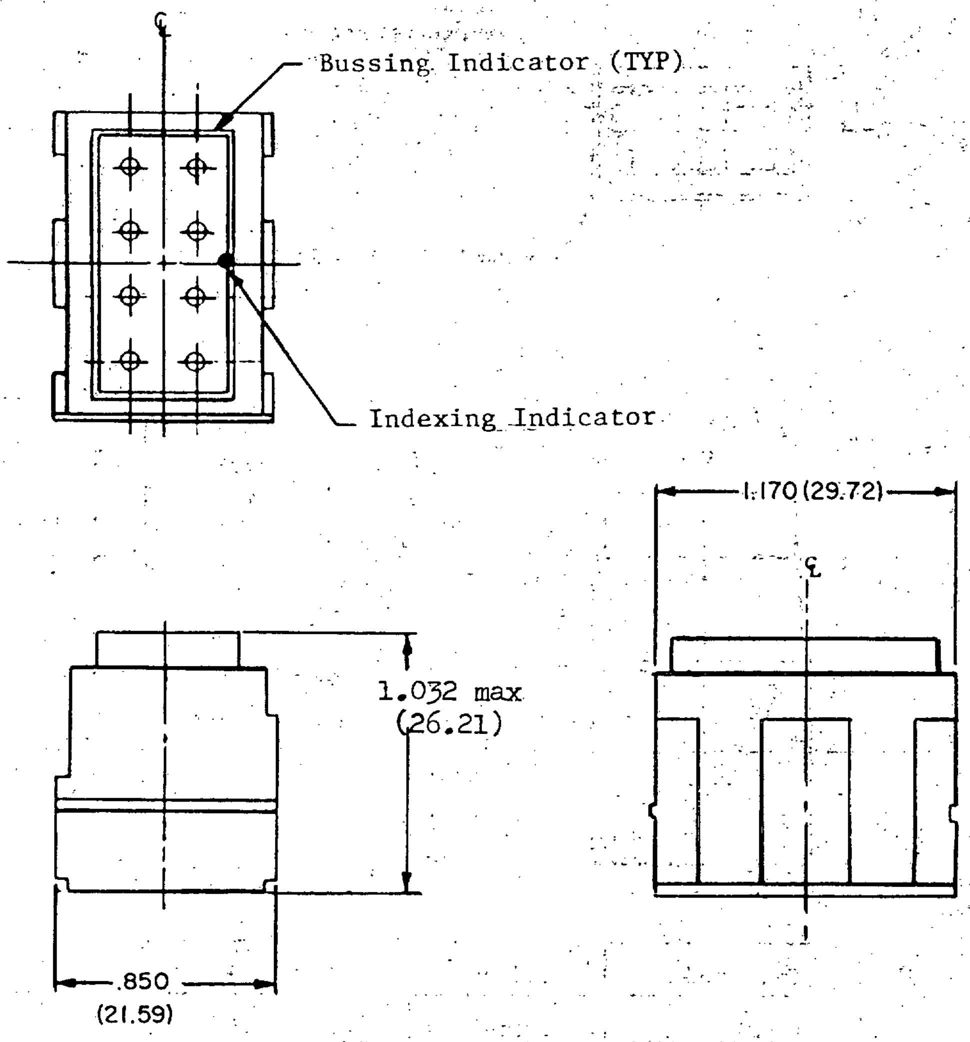

Part number	Color	Cond size
M81714/4-A*	green	14-12
M81714/4-B*	red	14-12
M81714/4-C*	black	14-12

The * in the above table shall be replaced by a bussing arrangement designator in accordance with MIL-T-81714/4.

(Inactive for New Design for Air Force Use)

Downloaded from http://www.everyspec.com

TERMINAL JUNCTION SYSTEMS MODULE,
FEEDBACK TYPE, SIZE 22HD

(Applicable Specification: MIL-T-81714/17)
(INACTIVE FOR NEW DESIGN FOR AIR FORCE USE)

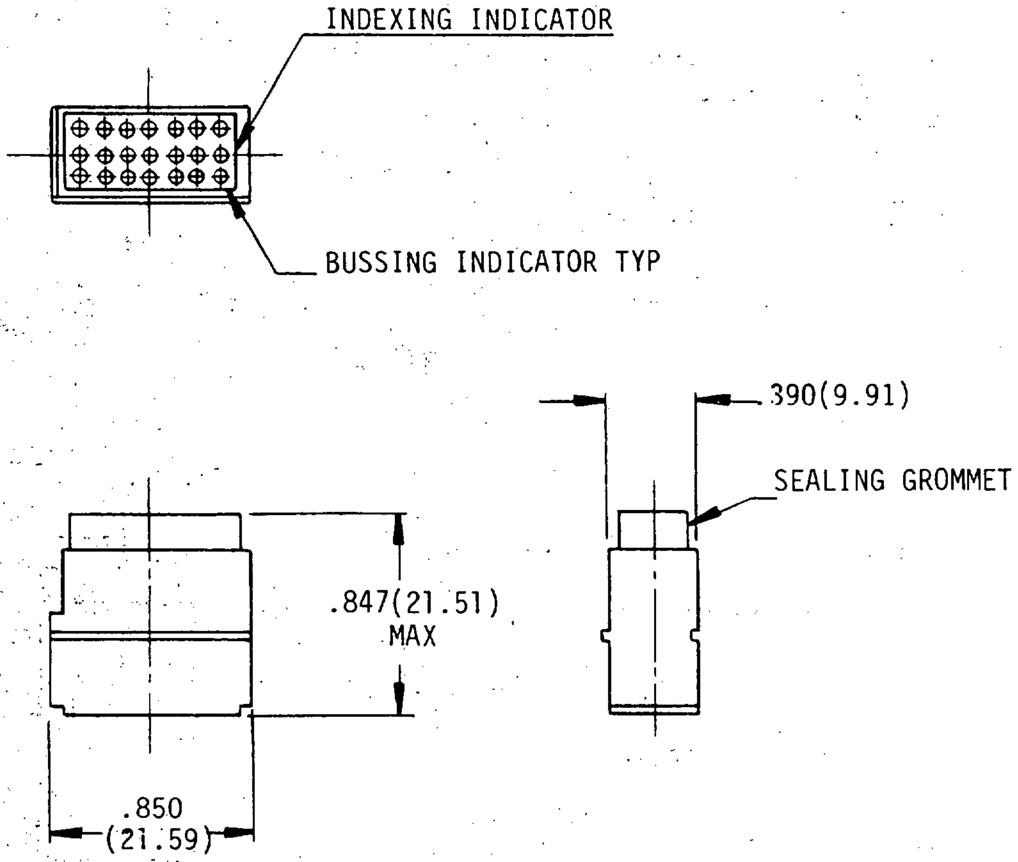

MODULE BLOCK SIZE 22 HD

PART NUMBER	MODULE CLASS	CONSISTS OF MODULE BLOCK AND			
		CONTACTS		SEALING PLUGS	
		PART NUMBER	QTY	PART NUMBER	QTY
M81714/17-A**	A	M39029/1-507	21	MS27488-22	4
M81714/17-B**	B	M39029/1-507	21	MS27488-22	4
M81714/17-C**	C	M39029/1-507	21	MS27488-22	4

**Bussing Arrangement

Downloaded from http://www.everyspec.com

TERMINAL JUNCTION SYSTEM
MODULES, ELECTRONIC, FEEDBACK TYPE, SIZE 20
(Applicable Specification: MIL-T-81714/18)
(INACTIVE FOR NEW DESIGN FOR AIR FORCE USE)

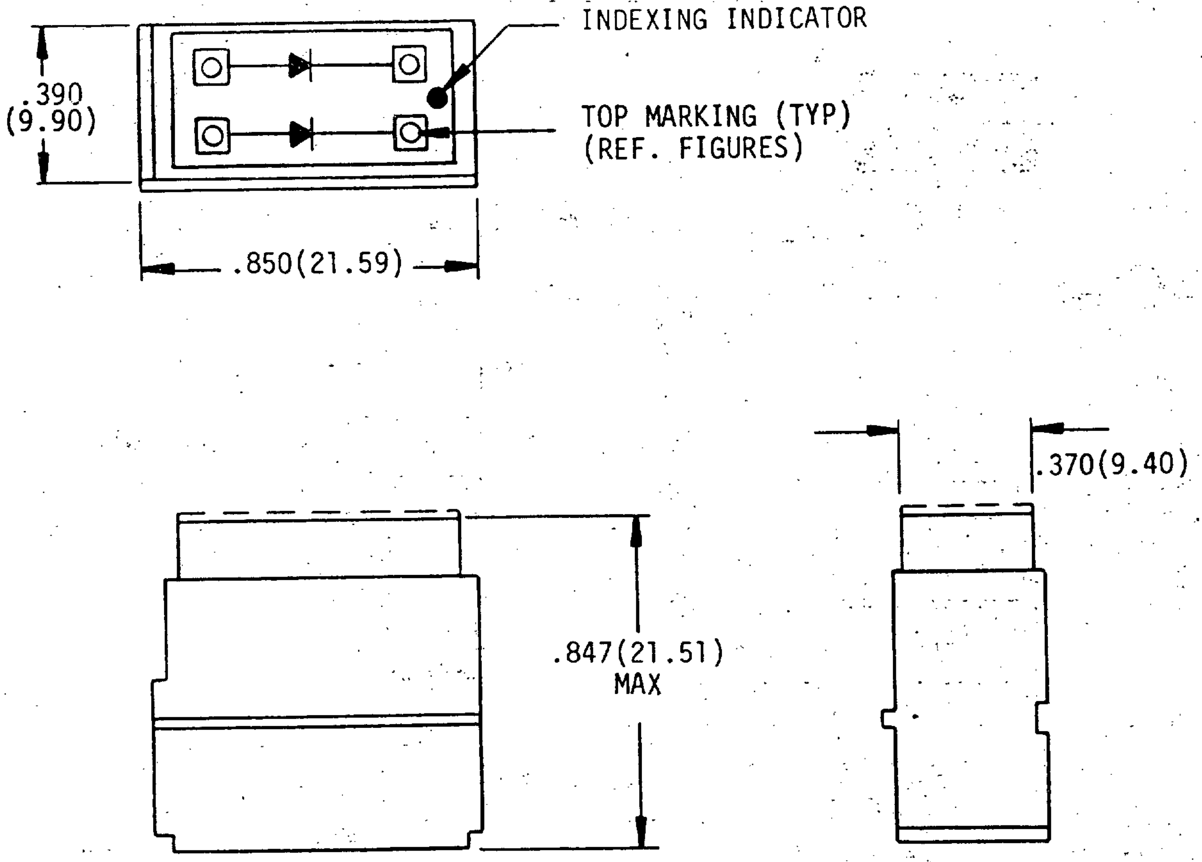

Size 20 Electronic Module Block

Downloaded from http://www.everyspec.com

MODULE NUMBER	RESISTORS (OHMS)
M81714/18-*-001	150
M81714/18-*-002	180
M81714/18-*-003	221
M81714/18-*-004	249
M81714/18-*-005	390
M81714/18-*-006	4750
M81714/18-*-007	3300
M81714/18-*-008	3900
M81714/18-*-009	2200
M81714/18-*-010	5600
M81714/18-*-011	24K
M81714/18-*-012	47.5
M81714/18-*-013	150K
M81714/18-*-014	100
M81714/18-*-301	150 150
M81714/18-*-302	1000 1000
M81714/18-*-303	150K 150K
M81714/18-*-304	2000 3000

*INDICATES MODULE CLASS (A,B,C)

MODULE NUMBER	RESISTOR (OHMS)	DIODE #	CAPACITOR #
M81714/18-*-501	-	IN5618	-
M81714/18-*-502	- -	IN1526 IN1526	-
M81714/18-*-503	- -	IN4003 IN4003	- -
M81714/18-*-504	- -	IN4003 IN4003	- -
M81714/18-*-505	- -	IN5618 IN5618	- -
M81714/18-*-506	- - - -	IN3611 IN3611 IN3611 IN3611	- - - -
M81714/18-*-507	- -	SX-36 IN5553	- -
M81714/18-*-701	- -	- IN5618	- -
M81714/18-*-702	1.0 -	- IN6162	- -
M81714/18-*-703	1.0 -	- IN6173	- -
M81714/18-*-801	-	-	M39014/13-0335

Downloaded from http://www.everyspec.com

TERMINAL JUNCTION SYSTEM
MODULES, ELECTRONIC, FEEDBACK TYPE, SIZE 16
(Applicable Specification: MIL-T-81714/19)
(INACTIVE FOR NEW DESIGN FOR AIR FORCE USE)

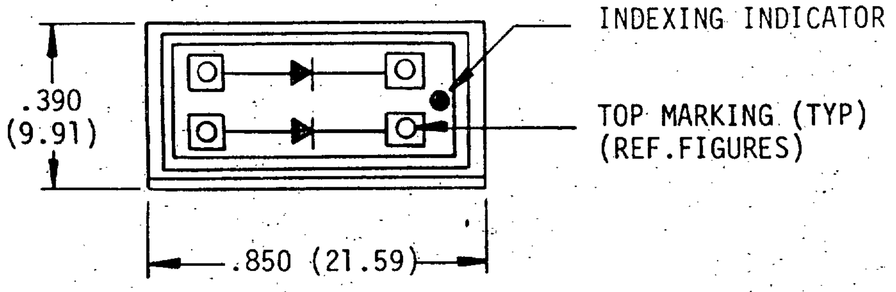

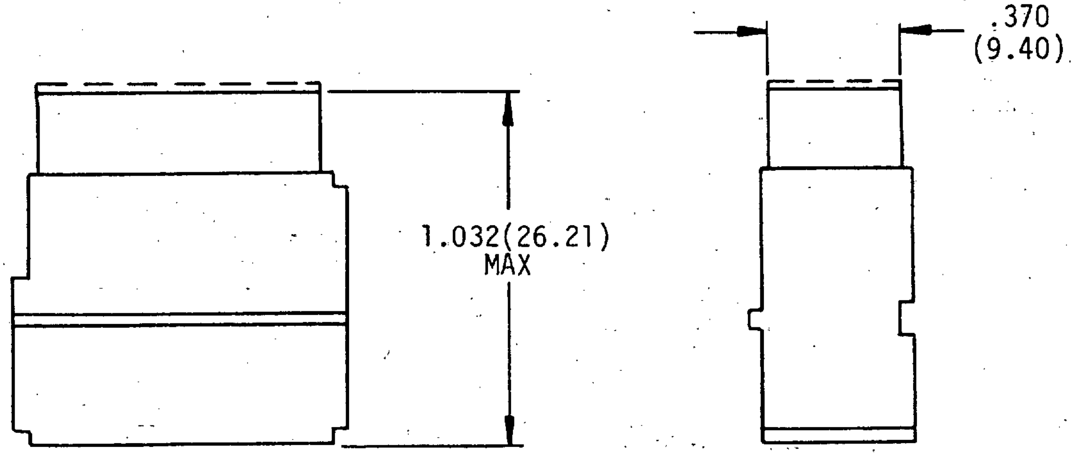

SIZE 16 ELECTRONIC MODULE BLOCK

Downloaded from http://www.everyspec.com

MODULE NUMBER	RESISTOR (OHMS)	DIODE #	PART #
M81714/19-*-001	-	IN5618	-
M81714/19-*-002	-	IN5061	-
M81714/19-*-003	- -	IN5626 IN5626	- -
M81714/19-*-004	- - - -	IN3611 IN3611 IN3611 IN3611	- - - -
M81714/19-*-005	- - - -	IN5622 IN5622 IN5622 IN5622	- - - -
M81714/19-*-601	1.0 - -	- IN5618 IN3613	- - -
M81714/19-*-602	1.0 -	- IN6162	- -
M81714/19-*-603	1.0 -	- IN6173	- -
M81714/19-*-801	150K 10K -	- - -	- - 2N2222 A
M8174/19-*-802	- - -	- IN5618 -	M39014/2-1407 - 1 AMP

* INDICATES MODULE CLASS (A, B, C)

Downloaded from http://www.everyspec.com

TERMINAL JUNCTION SYSTEM
MODULES, ELECTRONIC, FEEDBACK TYPE, SIZE 12

(APPLICABLE SPECIFICATION MIL-T-81714/20)
(INACTIVE FOR NEW DESIGN FOR AIR FORCE USE)

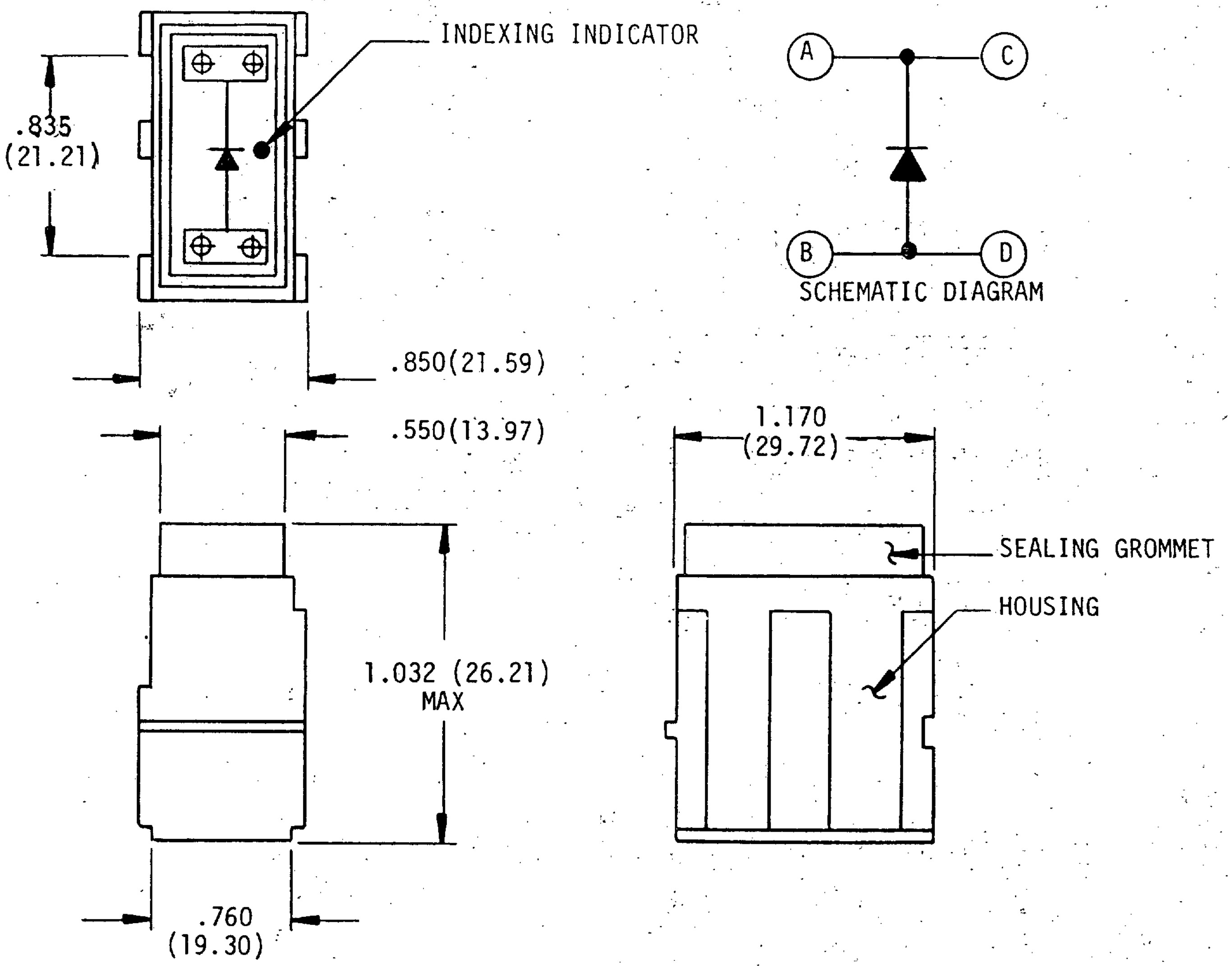

SIZE 12 ELECTRONIC MODULE BLOCK

MODULE NUMBER	DIODE NUMBER
M81714/20-*-001	JAN IN3618
M81714/20-*-002	JAN IN5622

* INDICATES MODULE CLASS (A, B, C)

Downloaded from http://www.everyspec.com

TERMINAL JUNCTION SYSTEM
MODULES, ELECTRONIC FEEDBACK TYPE, SIZE 20-1

(Applicable Specifications: MIL-T-81714/25)

(INACTIVE FOR NEW DESIGN FOR AIR FORCE USE)

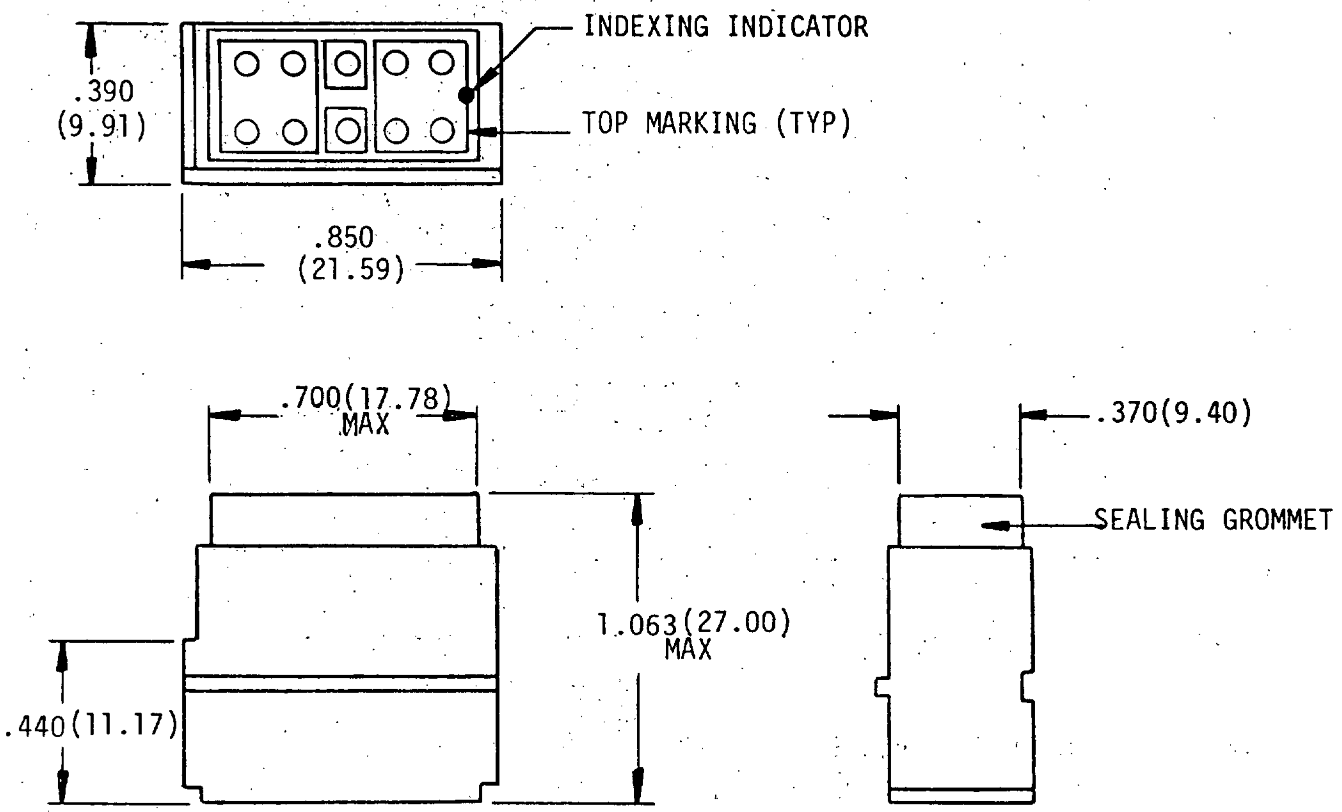

SIZE 20-1 ELECTRONIC MODULE BLOCK

Downloaded from http://www.everyspec.com

MODULE NUMBER	RESISTOR (OHMS)	DIODE #
M81714/25-*-001	150 220 390	- - -
M81714/25-*-002	4700 4700	- -
M81714/25-*-003	47 100	- -
M81714/25-*-004	15 K -	- IN2071
M81714/25-*005	150 150	- -
M81714/25-*006	1000 1000	- -
M81714/25-*007	51000 51000	- -
M81714/25-*-008	100K 100K	- -
M81714/25-*-009	56 110 110	- - -
M81714/25-*-010	39 120 120	- - -
M81714/25-*-011	150 470	- -

MODULE NUMBER	RESISTOR (OHMS)	DIODE #
M81714/25-*-012	180 390	- -
M81714/25-*-013	4700 15000	- -
M81714/25-*-014	510 510	- -
M81714/25-*-015	330 -	- IN2071
M81714/25-*-016	- -	IN2071 IN2071
M81714/25-*-017	- -	IN2071 IN2071
M81714/25-*-018	150 47000	- -
M81714/25-*-019	330 1500	- -
M81714/25-*-020	220 330	- -
M81713/25-*-021	100 220	- -
M81714/25-*-022	220 220	- -
M81714/25-*-023	100 100	- -

* INDICATES MODULE CLASS (A,B,C)

Downloaded from http://www.everyspec.com

TERMINAL JUNCTION SYSTEM
MODULES, ELECTRONIC, FEEDBACK TYPE, SIZE 20-2

(Applicable Specification: MIL-T-81714/ 26)
(INACTIVE FOR NEW DESIGN FOR AIR FORCE USE)

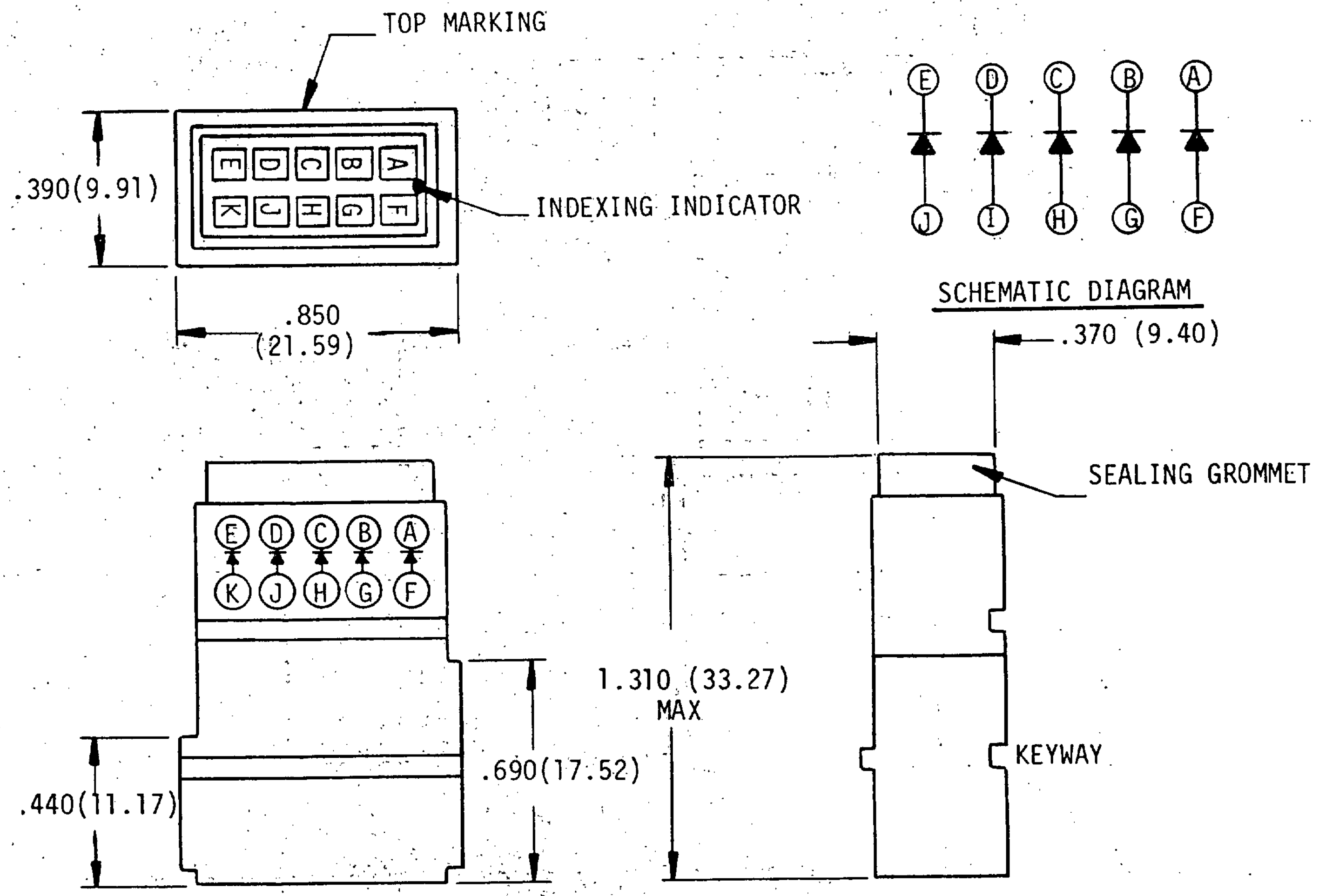

Size 20-2 electronic module block.

MODULAR NUMBER	DIODE #	QUANTITY
M81714/26-*-001	IN5618	5
M81714/26-*-002	IN5552	5

* - INDICATES MODULAR CLASS (A,B,C)

Downloaded from http://www.everyspec.com

TERMINAL JUNCTION SYSTEM
MODULES, ELECTRONIC, FEEDBACK TYPE, SIZES 20-3,
20-4, 20-5 VERTICAL MOUNTING WITH INTEGRAL BRACKET

(Applicable Specification: MIL-T-81714/30)

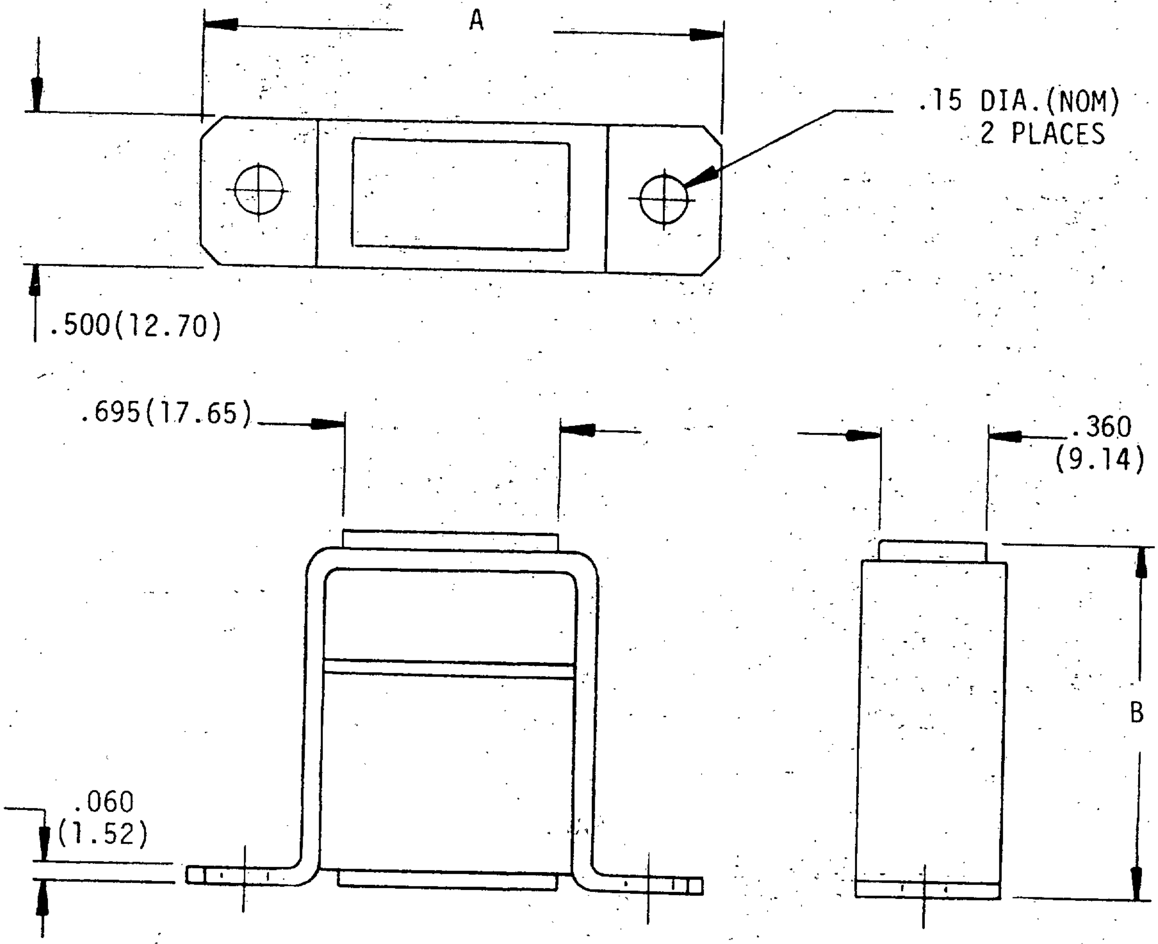

MODULE NUMBER	SIZE	DIODE QUANTITY	DIODE #	A	B
M81714/30-*-001	20-3	2	IN5618	1.75(44.45)	1.015(25.78)
M81714/30-*-002	20-4	2	IN5552	1.75(44.45)	1.310(33.27)
M81714/30-*-003	20-4	5	IN5618	1.75(44.45)	1.310(33.27)
M81714/30-*-004	20-4	5	IN5552	1.75(44.45)	1.310(33.27)
M81714/30-*-005	20-5	6	IN5618	1.88(47.75)	1.310(33.27)
M81714/30-*-006	20-5	6	IN5552	1.88(47.75)	1.310(33.27)

* INDICATES MODULE CLASSES (A,B,C)

(INACTIVE FOR NEW DESIGN FOR AIR FORCE USE)

Downloaded from http://www.everyspec.com

TERMINAL JUNCTION SYSTEM
MODULES, ELECTRONIC, FEEDBACK TYPE, SIZES 20-6
20-7, 20-8 HORIZONTAL MOUNTING WITH INTEGRAL BRACKET

(Applicable Specification: MIL-T-81714/31)

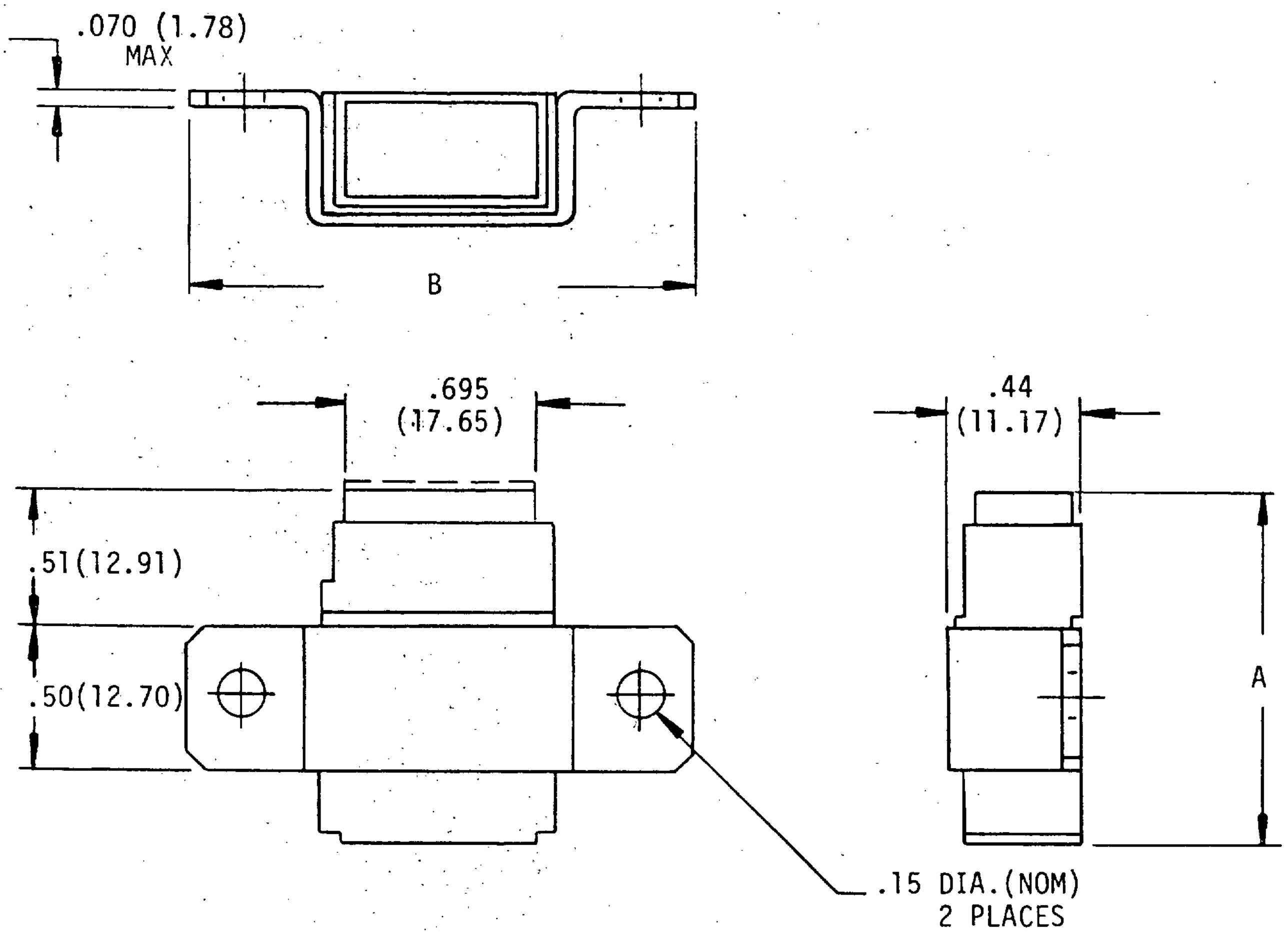

MODULE NUMBER	SIZE	DIODE QUANTITY	DIODE #	A	B
M81714/31-*-001	20-6	2	IN5618	1.015(25.78)	1.75(44.45)
M81714/31-*-002	20-7	2	IN5552	1.310(33.27)	1.75(44.45)
M81714/31-*-003	20-7	5	IN5618	1.310(33.27)	1.75(44.45)
M81714/31-*-004	20-7	5	IN5552	1.310(33.27)	1.75(44.45)
M81714/31-*-005	20-8	6	IN5618	1.310(33.27)	1.88(47.75)
M81714/31-*-006	20-8	6	IN5552	1.310(33.27)	1.88(47.75)

* INDICATES MODULE CLASSES (A,B,C)

(INACTIVE FOR NEW DESIGN FOR AIR FORCE USE)

Downloaded from http://www.everyspec.com

(This page left blank)

Downloaded from http://www.everyspec.com

SECTION 702

TERMINAL JUNCTION SYSTEMS, MODULE, FEEDTHRU TYPE, SIZE 22

MIL-T-81714/6

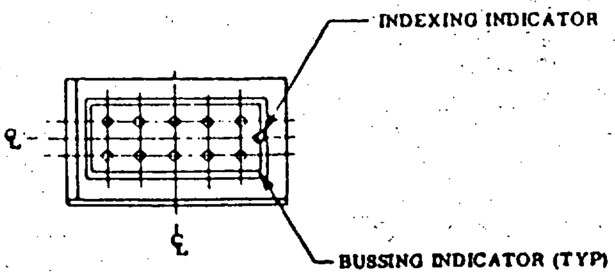

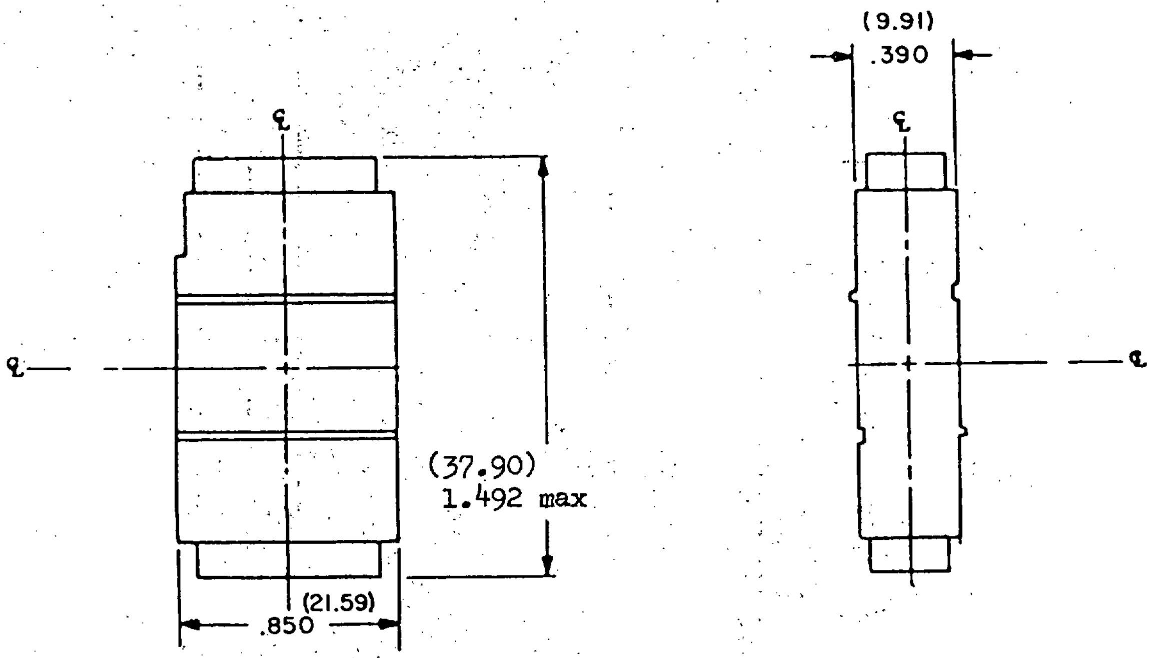

Part number	Color	Cond size
M81714/6-A*	green	26-24-22
M81714/6-B*	red	26-24-22
M81714/6-C*	black	26-24-22

The * in the above table shall be replaced by a bussing arrangement designator in accordance with MIL-T-81714/6.

(Inactive for New Design for Air Force Use)

Downloaded from http://www.everyspec.com

TERMINAL JUNCTION SYSTEMS, MODULE,
FEEDTHRU TYPE, SIZE 20

MIL-T-81714/7

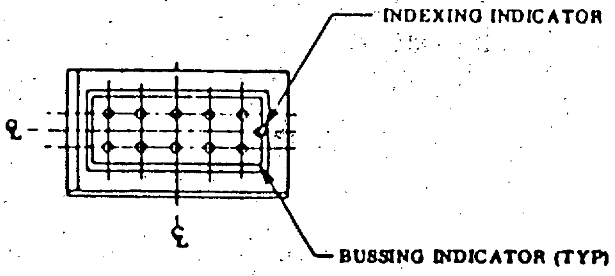

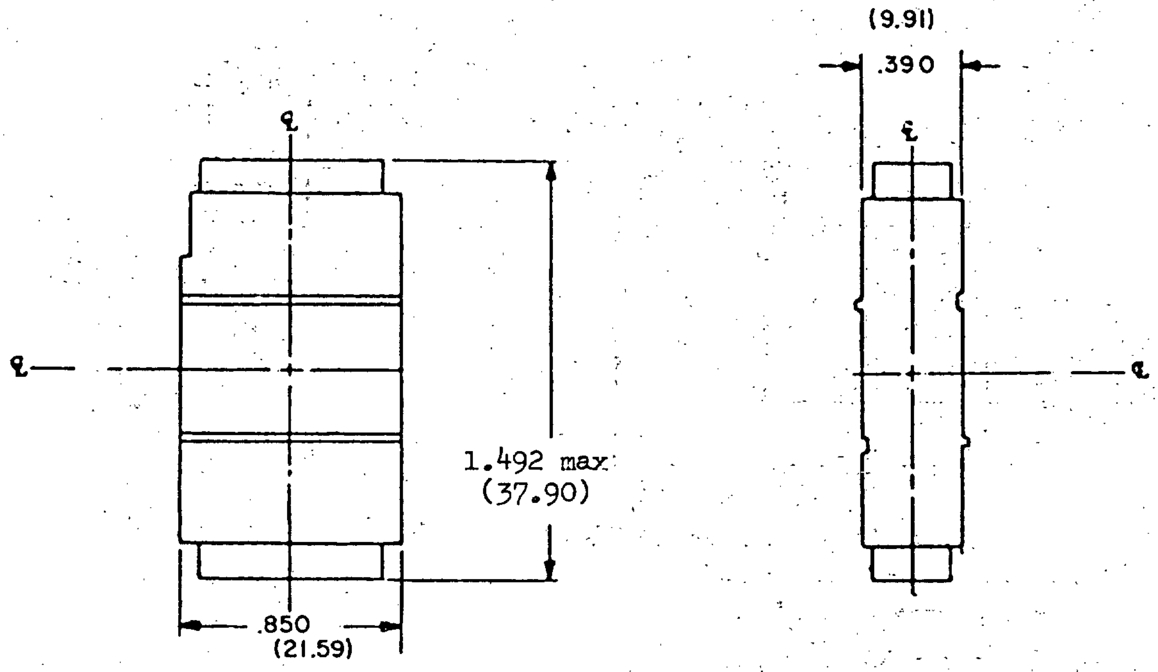

Part number	Color	Cond size
M81714/7-A*	green	24-22-20
M81714/7-B*	red	24-22-20
M81714/7-C*	black	24-22-20

The * in the above table shall be replaced by a bussing arrangement designator in accordance with MIL-T-81714/7.

(Inactive for New Design for Air Force Use)

Downloaded from http://www.everyspec.com

TERMINAL JUNCTION SYSTEMS, MODULE, FEEDTHRU TYPE, SIZE 16

MIL-T-81714/8

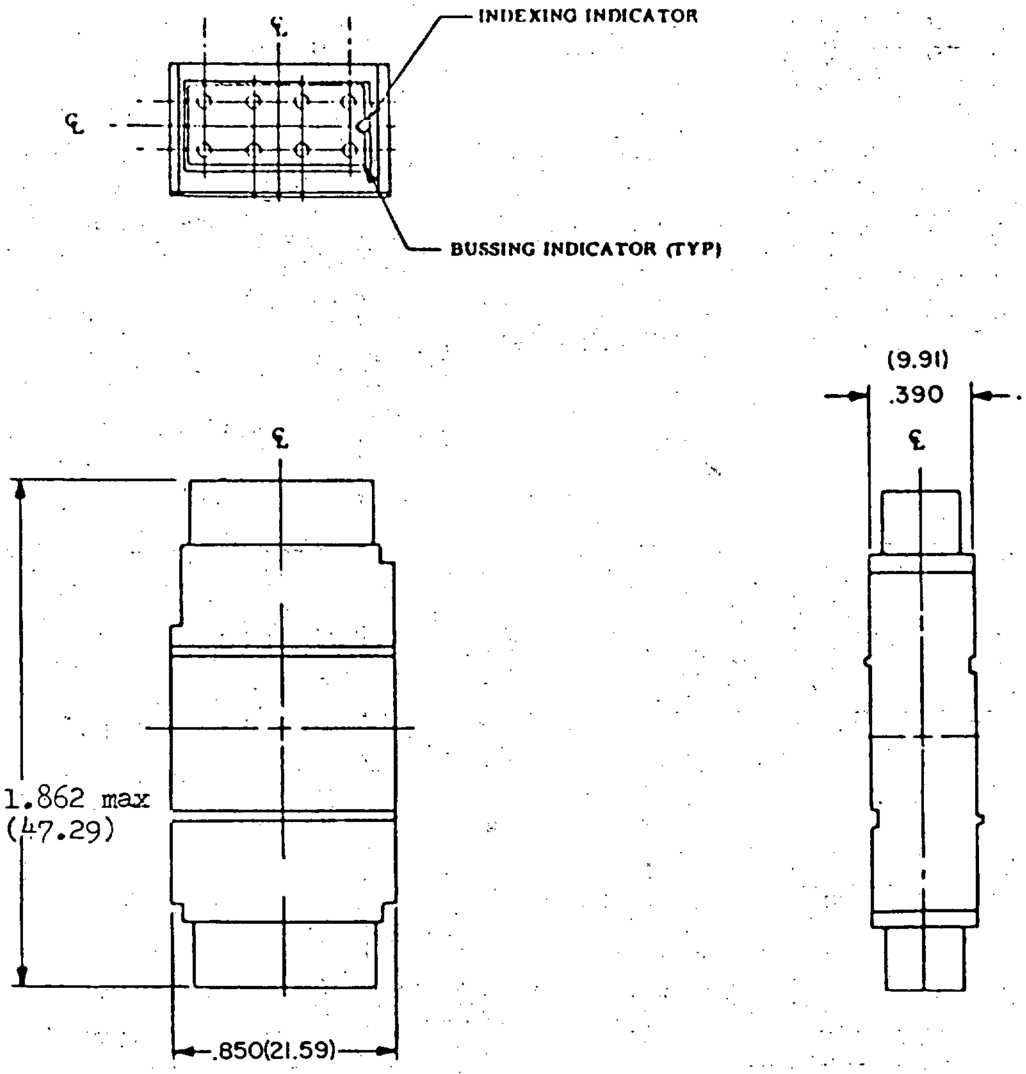

Part number	Color	Cond size
M81714/8-A*	green	20-18-16
M81714/8-B*	red	20-18-16
M81714/8-C*	black	20-18-16

The * in the above table shall be replaced by a bussing arrangement designator in accordance with MIL-T-81714/8.

(Inactive for New Design for Air Force Use)

Downloaded from http://www.everyspec.com

TERMINAL JUNCTION SYSTEMS, MODULE, FEEDTHRU TYPE, SIZE 12

MIL-T-81714/9

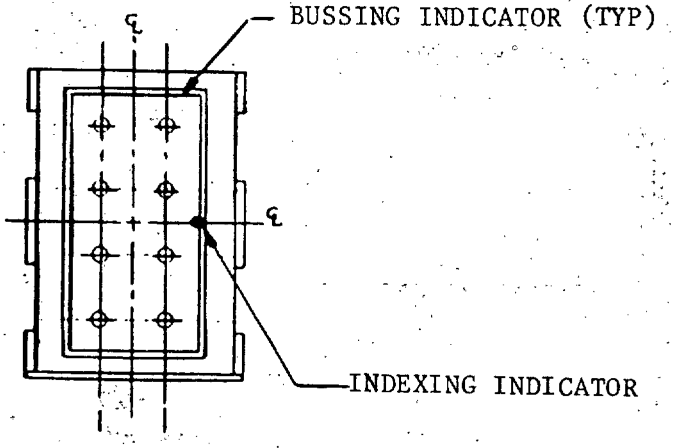

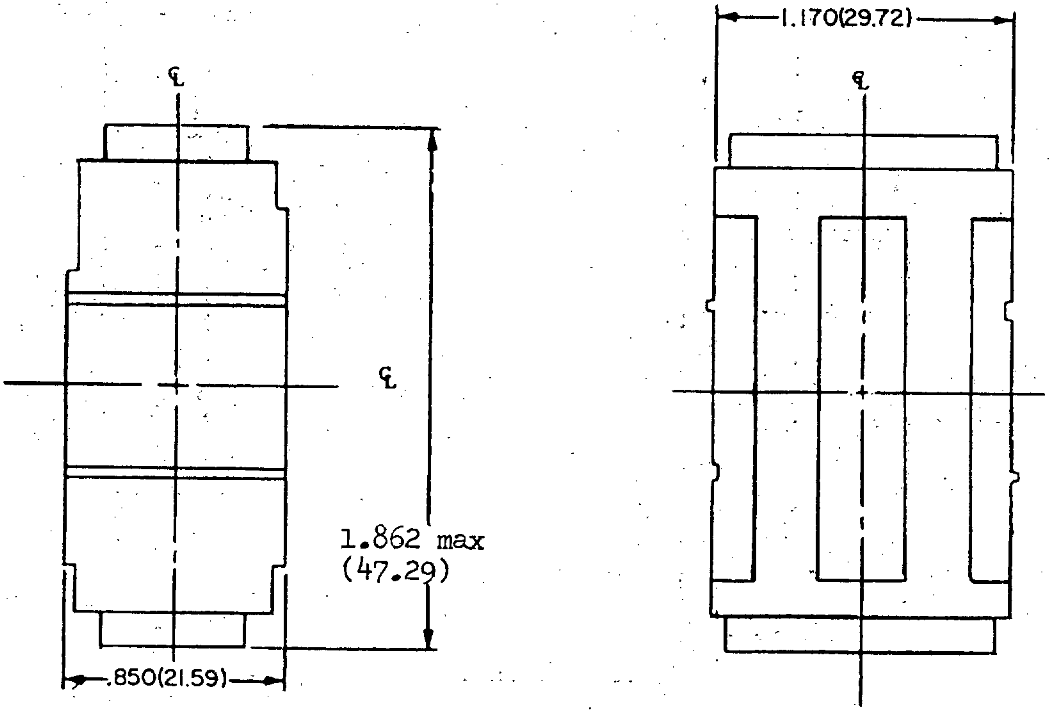

Part number	Color	Cond size
M81714/9-A*	green	14-12
M81714/9-B*	red	14-12
M81714/9-C*	black	14-12

The * in the above table shall be replaced by a bussing arrangement designator in accordance with MIL-T-81714/9.

(Inactive for New Design for Air Force Use)

Downloaded from http://www.everyspec.com

SECTION 703

TERMINAL JUNCTION SYSTEMS, TRACK,
FEEDBACK TYPE

MIL-T-81714/5

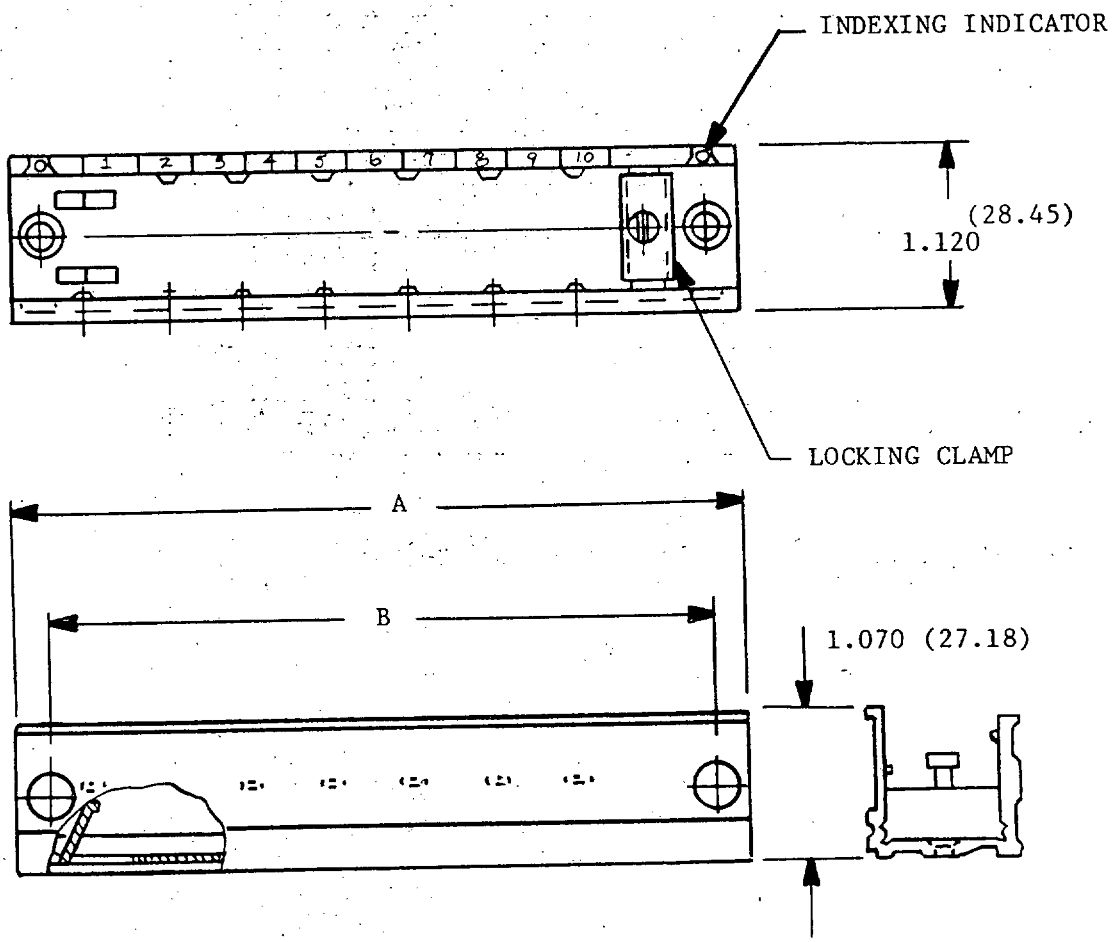

NOTE: These parts used with the following terminal junction systems modules: MIL-T-81714/1, MIL-T-81714/2, MIL-T-81714/3, and MIL-T-81714/4.

(See next page for dimensions.)

(Inactive for New Design for Air Force Use)

Downloaded from http://www.everyspec.com

Part number M81714/5-	Number of blocks	A	B
1	10	5.291 (134.39)	4.791 (121.69)
2	3	2.561 (65.05)	2.061 (52.35)
3	4	2.951 (74.96)	2.451 (62.26)
4	5	3.341 (84.86)	2.841 (72.16)
5	6	3.731 (94.77)	3.231 (82.07)
6	7	4.121 (104.67)	3.621 (91.97)
7	8	4.511 (114.58)	4.011 (101.88)
8	9	4.901 (124.49)	4.401 (111.79)
9	11	5.681 (144.30)	5.181 (131.60)
10	12	6.071 (154.20)	5.571 (141.50)
11	13	6.461 (164.11)	5.961 (151.41)
12	14	6.851 (174.02)	6.351 (161.32)
13	15	7.241 (183.92)	6.741 (171.22)

(Inactive for New Design for Air Force Use)

Downloaded from http://www.everyspec.com

TERMINAL JUNCTION SYSTEMS, TRACK, FEEDBACK TYPE, LIGHT WEIGHT

MIL-T-81714/16

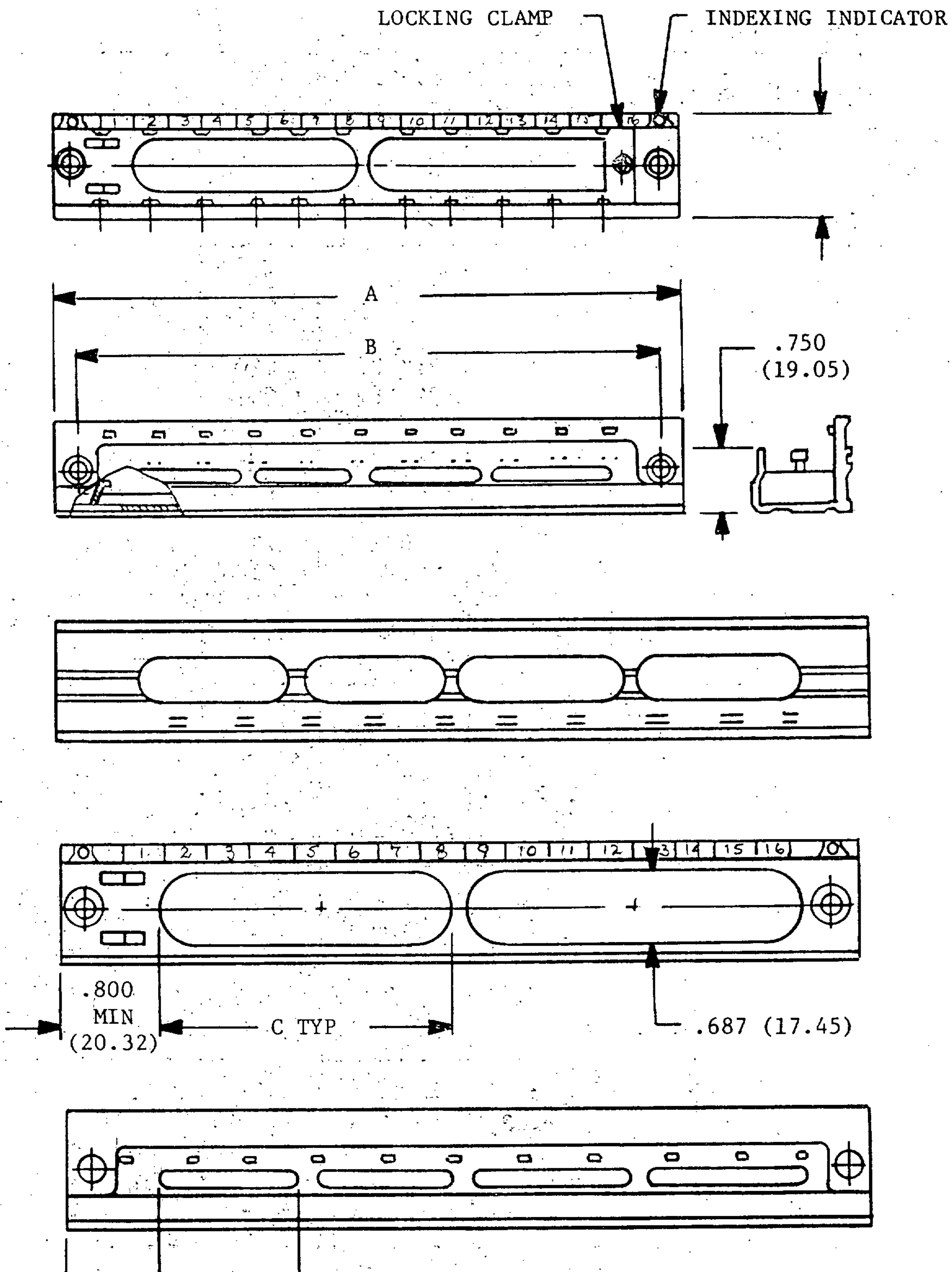

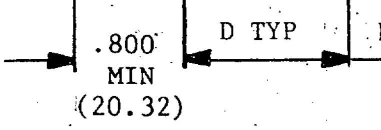

NOTE: These parts used with the following terminal junction systems modules: MIL-T-81714/1, MIL-T-81714/2, MIL-T-81714/3, MIL-T-81714/4, MIL-T-81714/17, MIL-T-81714/18, and MIL-T-81714/19.
(Inactive for New Design for Air Force Use)

Downloaded from http://www.everyspec.com

Part number M81714/16-	Number 1/ of modules	A	B	C	D
1	10	5.291 (134.39)	4.791 (121.69)	1.67 (42.42)	1.67 (42.42)
2	3	2.561 (65.05)	2.061 (52.35)	1.09 (27.69)	1.09 (27.69)
3	4	2.951 (74.96)	2.451 (62.26)	1.48 (37.59)	1.48 (37.59)
4	5	3.341 (84.86)	2.841 (72.16)	.70 (17.78)	.70 (17.78)
5	6	3.731 (94.77)	3.231 (82.07)	.90 (22.86)	.90 (22.86)
6	7	4.121 (104.67)	3.621 (91.97)	1.09 (27.69)	1.09 (27.69)
7	8	4.511 (114.58)	4.011 (101.88)	1.28 (32.51)	1.28 (32.51)
8	9	4.901 (124.49)	4.401 (111.79)	1.48 (37.59)	1.48 (37.59)
9	11	5.681 (144.30)	5.181 (131.60)	1.87 (47.50)	.86 (21.84)
10	12	6.071 (154.20)	5.571 (141.50)	2.06 (52.32)	.96 (24.38)
11	13	6.461 (164.11)	5.961 (151.41)	2.26 (57.40)	1.06 (26.92)
12	14	6.851 (174.02)	6.351 (161.32)	2.45 (62.23)	1.16 (29.46)
13	15	7.241 (183.92)	6.741 (171.22)	2.65 (67.31)	1.25 (31.75)

1/ Number of modules applies to the 22HD, 22, 20, and 16 sizes. The number of size 12 modules is the number shown, divisible by 3.

Downloaded from http://www.everyspec.com

SECTION 704

TERMINAL JUNCTIONS SYSTEMS, TRACK, FEEDTHRU TYPE

MIL-T-81717/10

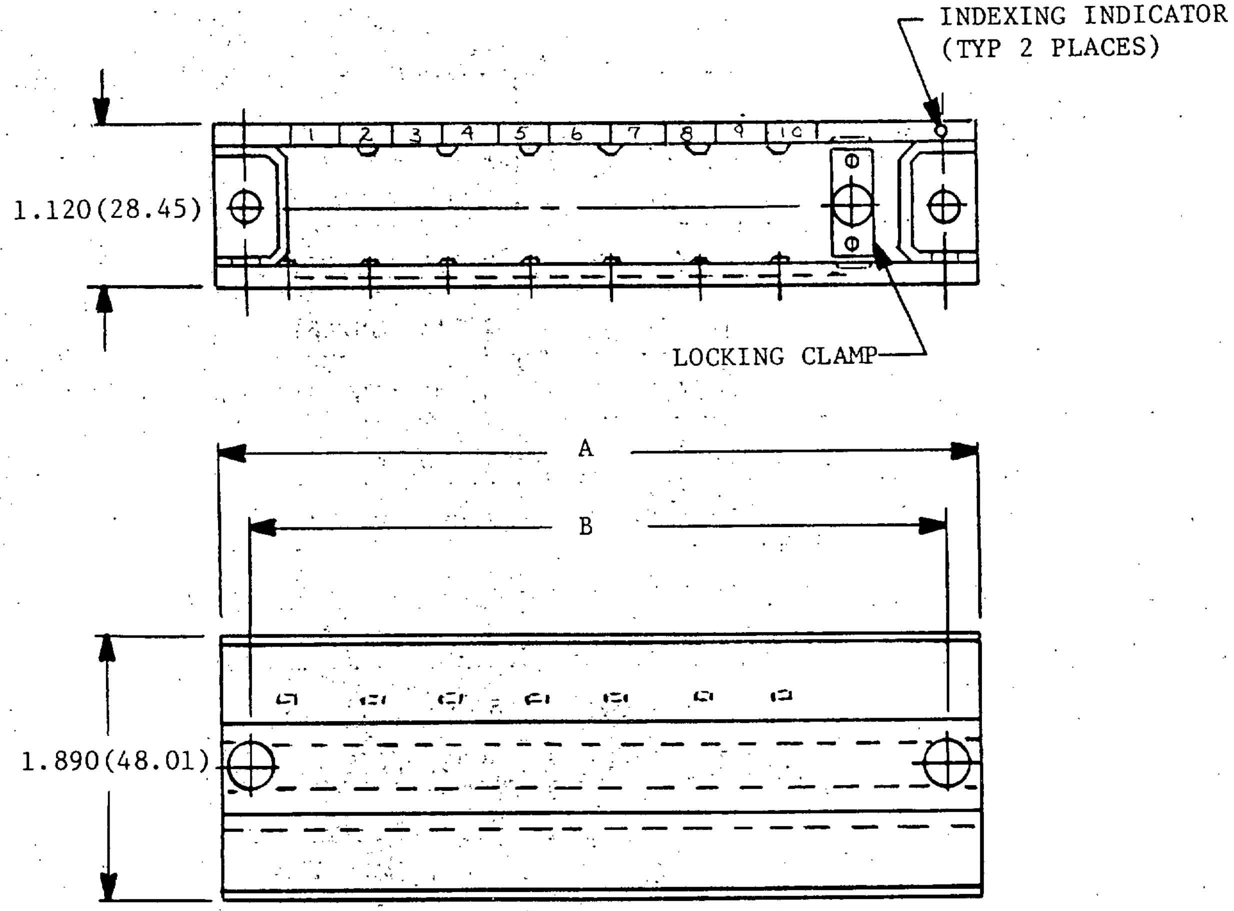

NOTE: These parts used with the following terminal junction systems modules: MIL-T-81714/6, MIL-T-81714/7, MIL-T-81714/8, and MIL-T-81714/9.

(See next page for dimensions.)

(Inactive for New Design for Air Force Use)

Downloaded from http://www.everyspec.com

Part number M81714/10	Number of blocks	A	B
1	10	5.551 (141.00)	5.051 (128.30)
2	3	2.821 (71.65)	2.321 (58.95)
3	4	3.211 (81.56)	2.711 (68.86)
4	5	3.601 (91.47)	3.101 (78.77)
5	6	3.991 (101.37)	3.491 (88.67)
6	7	4.381 (112.28)	3.881 (98.58)
7	8	4.771 (121.18)	4.271 (108.48)
8	9	5.161 (131.09)	4.661 (118.39)
9	11	5.941 (150.90)	5.441 (138.20)
10	12	6.331 (160.81)	5.831 (148.11)
11	13	6.721 (170.71)	6.221 (158.01)
12	14	7.111 (180.62)	6.611 (167.92)
13	15	7.501 (190.53)	7.001 (177.83)

(Inactive for New Design for Air Force Use)

Downloaded from http://www.everyspec.com

TERMINAL. JUNCTION SYSTEMS, TRACK

FEEDTHRU TYPE, LIGHT WEIGHT

MIL-T-81714/14

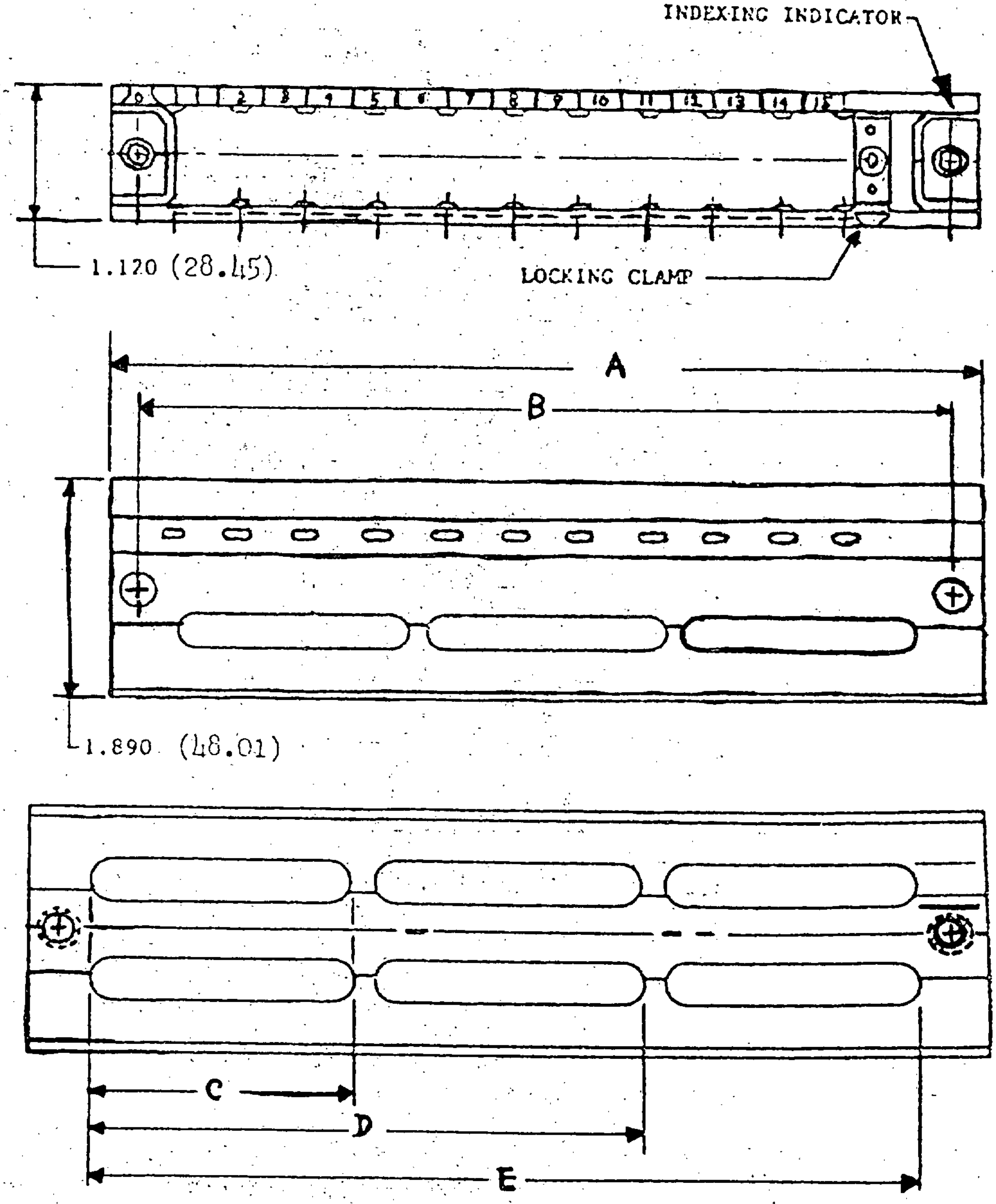

NOTE: These parts used with the following terminal junction system modules: MIL-T-81714/6, MIL-T-81714/7, MIL-T-81714/8, and MIL-T-81714/9.

(See next page for dimensions.)

(Inactive for New Design for Air Force Use)

Downloaded from http://www.everyspec.com

Part number 1/ M81714/14-	Number 2/ of modules	A	B	C	D	E
1	10	5.551 (141.00)	5.051 (128.30)	2.08 (52.83)	4.35 (110.49)	------
2	3	2.821 (71.65)	2.321 (58.95)	1.62 (41.15)	------	------
3	4	3.211 (81.56)	2.711 (68.86)	2.01 (51.05)	------	------
4	5	3.601 (91.47)	3.101 (78.77)	2.40 (60.96)	------	------
5	6	3.991 (101.37)	3.491 (88.67)	1.30 (33.02)	2.79 (70.87)	------
6	7	4.381 (111.28)	3.881 (98.58)	1.49 (37.85)	3.18 (80.77)	------
7	8	4.771 (121.18)	4.271 (108.48)	1.69 (42.93)	3.57 (90.68)	------
8	9	5.161 (131.09)	4.661 (118.39)	1.88 (47.75)	3.96 (100.58)	------
9	11	5.941 (150.90)	5.441 (138.20)	2.27 (57.66)	4.74 (120.40)	------
10	12	6.331 (160.81)	5.831 (148.11)	2.47 (62.74)	5.13 (130.30)	------
11	13	6.721 (170.71)	6.221 (158.01)	1.71 (43.43)	3.61 (91.69)	5.52 (140.21)
12	14	7.111 (180.62)	6.611 (167.92)	1.84 (46.74)	3.86 (98.04)	5.90 (149.86)
13	15	7.501 (190.53)	7.001 (177.83)	1.97 (50.04)	4.14 (105.16)	6.30 (160.02)

1/ Add "S" to part number for parts made from stainless steel. No letter is added for parts made from aluminum.

2/ Number of modules applies to the 22, 20, and 16 sizes. The number of size 12 modules is the number shown, divisible by 3.

Downloaded from http://www.everyspec.com

SECTION 705

TERMINAL JUNCTION SYSTEMS, SPLICE

(APPLICABLE SPECIFICATION MIL-T-8174/11)

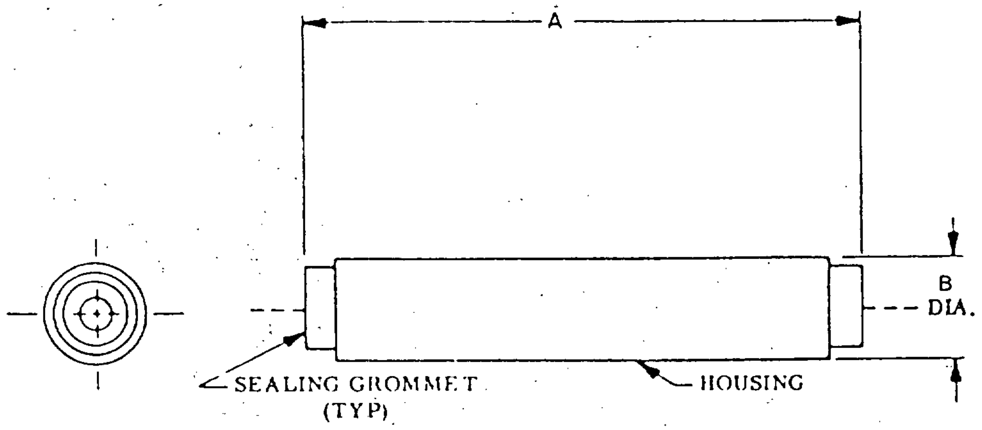

Part number	Cond Size	A max	B max
M81714/11-*22	26-24-22	1.492 (37.90)	.250(6.35)
M81714/11-*20	24-22-20	1.492 (37.90)	.250(6.35)
M81714/11-*16	20-18-16	1.862 (46.48)	.281(7.14)
M81714/11-*12	14-12	1.862 (46.48)	.344(8.74)

The * in the above table shall be replaced by a splice class designator in accordance with MIL-T- 81714/11 (INACTIVE FOR NEW DESIGN FOR AIR FORCE USE)

Downloaded from http://www.everyspec.com

TERMINAL JUNCTION SYSTEMS, SPLICE, DOUBLE

(Applicable Specification: MIL-T-81714/12)

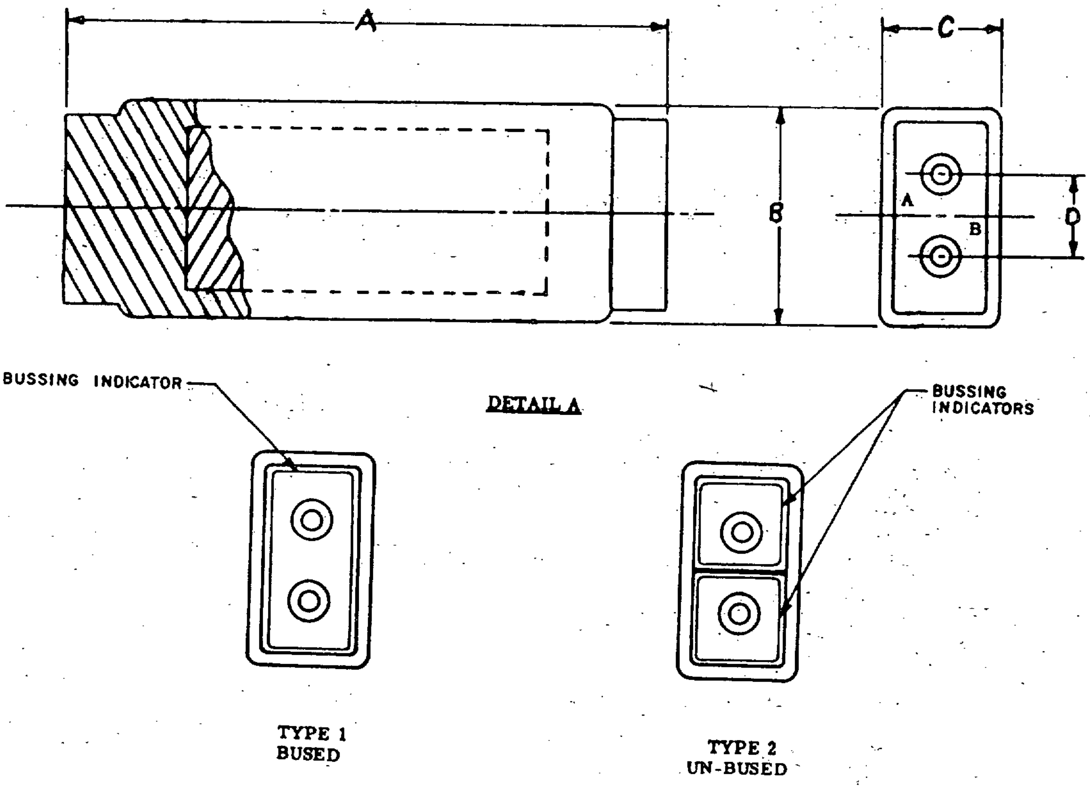

PART NUMBER	A MAX	B DIA.	C	D
M81714/12-22*-*	1.552(39.42)	.400 (10.16)	.275 (6.99)	.130(3.30)
M81714/12-20*-*	1.552(39.42)	.400 (10.16)	.275 (6.99)	.130(3.30)
M81714/12-16*-*	1.922(48.82)	.500 (12.70)	.300 (7.62)	.180(4.57)
M81714/12-12*-*	1.922(48.82)	.620 (15.75)	.370 (9.40)	.250(6.35)

THE FIRST * INDICATES CLASS A, B, OR C
THE SECOND * INDICATES TYPE 1 OR 2
(INACTIVE FOR NEW DESIGN FOR AIR FORCE USE)

Downloaded from http://www.everyspec.com

TERMINAL JUNCTION SYSTEM
SPLICERS, ELECTRONIC, INTEGRAL DIODE

(Applicable Specification: MIL-T-81714/21)

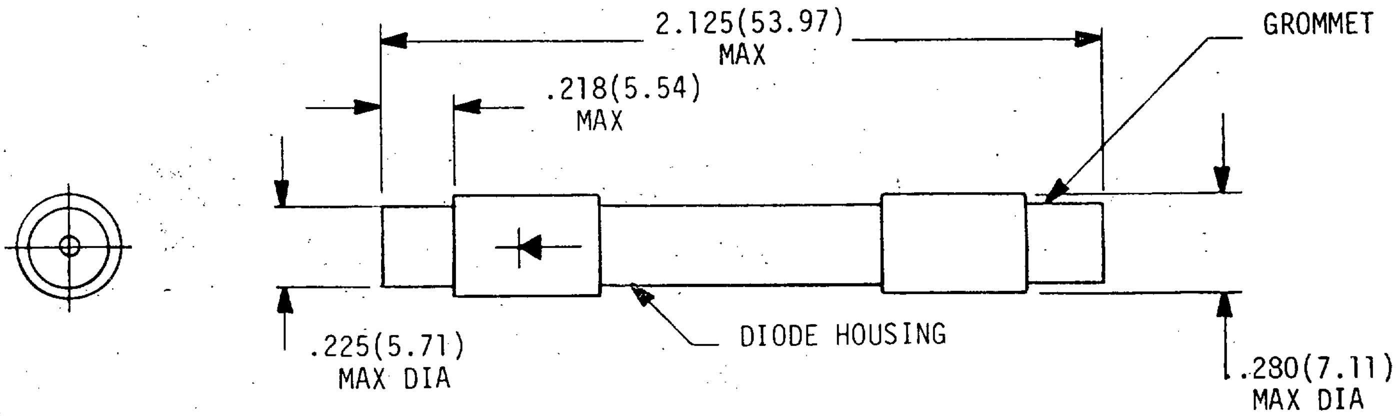

PART NUMBER	DIODE P/N
M81714/21-1*001	JAN IN5618
M81714/21-1*002	JAN IN5618
M81714/21-1*003	JAN IN4148
M81714/21-1*004	JAN IN5620

* CLASS A, B OR C

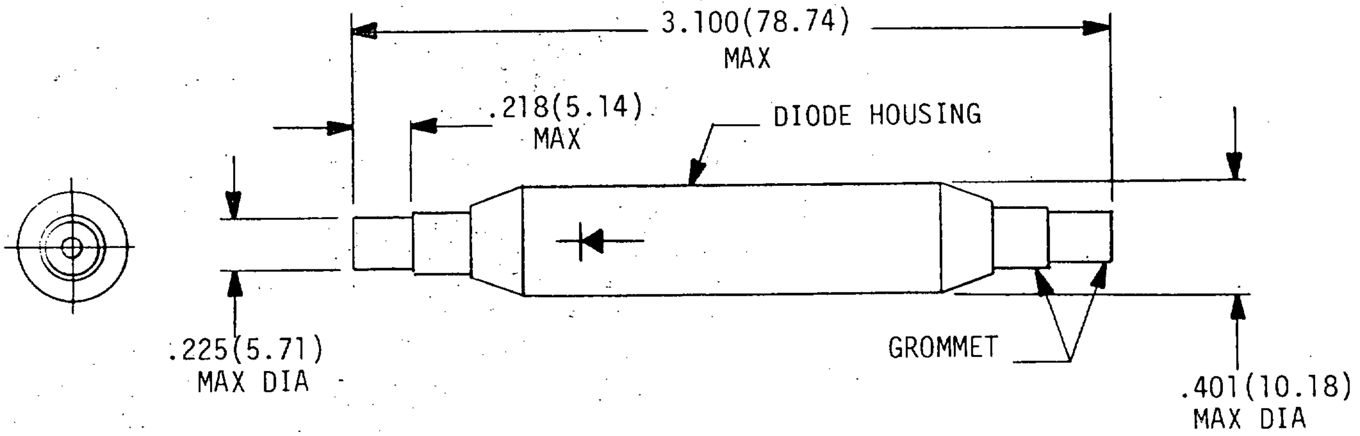

PART NUMBER	DIODE P/N
M81714/21-2*001	IN5061
M81714/21-2*002	IN5199

* CLASS A, B OR C
(INACTIVE FOR NEW DESIGN FOR AIR FORCE USE)

Downloaded from http://www.everyspec.com

TERMINAL JUNCTION SYSTEM
SPLICES, ELECTRONIC, INTEGRAL RESISTOR

(Applicable Specifications: MIL-T-81714/22)

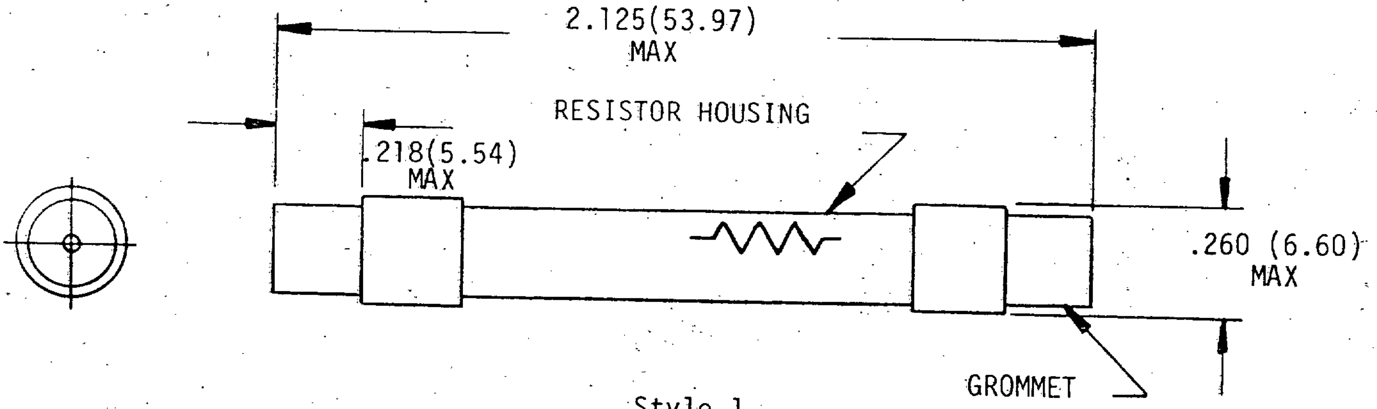

Style 1.

PART NUMBER 1/	OHMS	RESISTOR P/N	CONTACTS		
			QTY	SIZE	PART NUMBER
M81714/22-1*001	100	RLR07C1000JP	2	20	M39029/1-101
M81714/22-1*002	9100	RLR07C9101GM	2	20	M39029/1-101

* Class A, B or C

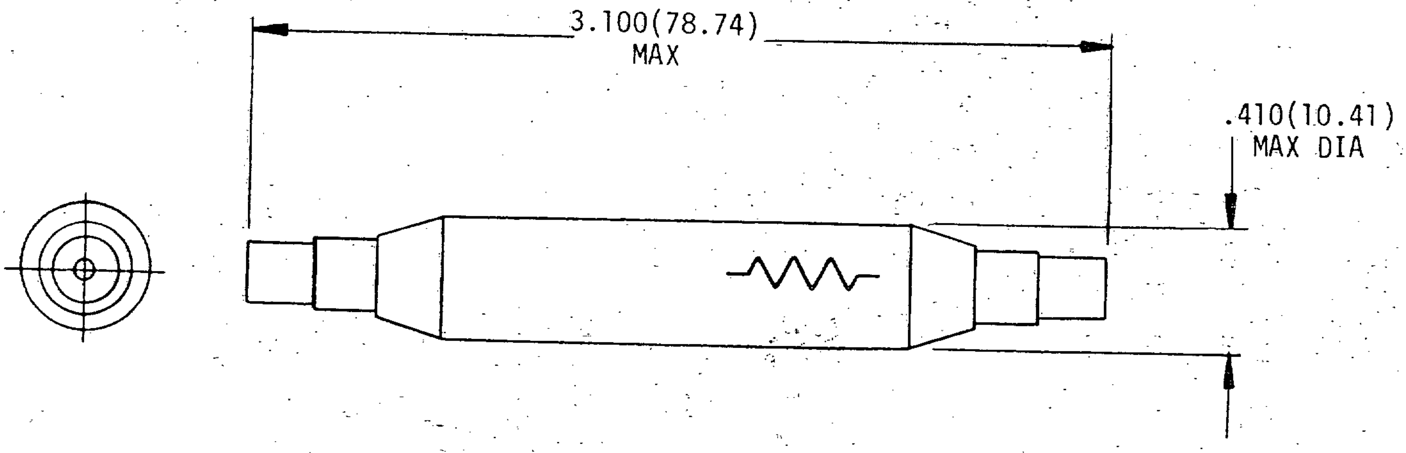

Style 2.

PART NUMBER 1/	OHMS	RESISTOR P/N	CONTACTS		
			QTY	SIZE	PART NUMBER
M81714/22-2*001	9100	RLR20C9101GM	2	20	M39029/1-101

* Class A, B or C
(INACTIVE FOR NEW DESIGN FOR AIR FORCE USE)

Downloaded from http://www.everyspec.com

TERMINAL JUNCTION SYSTEM
SPLICES, ELECTRONIC, INTEGRAL FUSE

(Applicable Specification: MIL-T-81714/23)

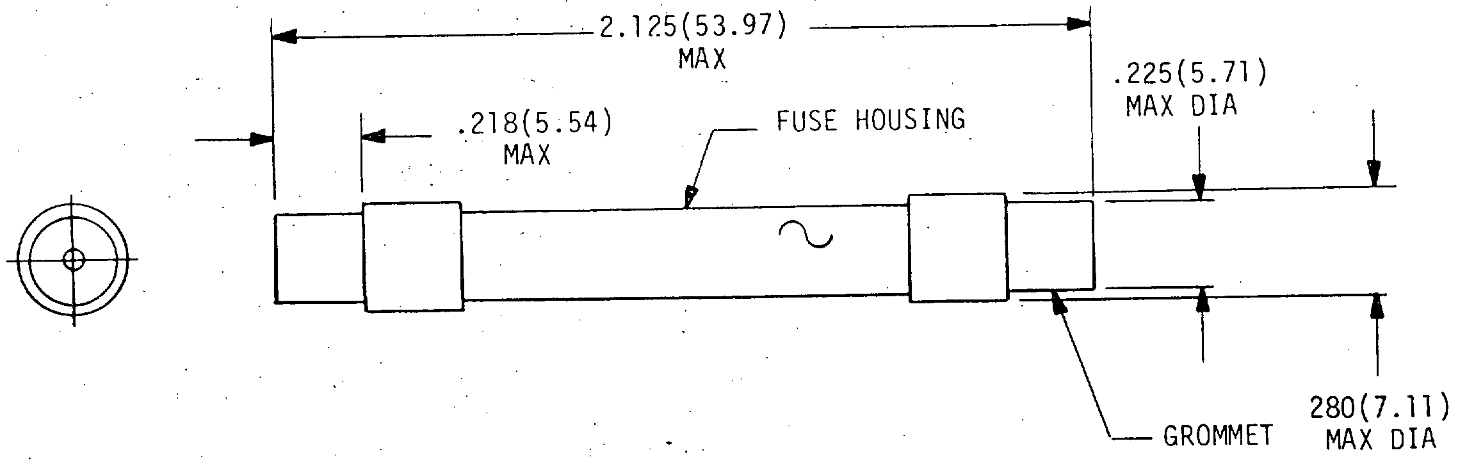

Style 1 Splice Fuse

PART NUMBER	FUSE RATING		CONTACT
	AMPS	VOLTS	SIZE
M81714/23-1*001	1/16	125	20
M81714/23-1*002	1/8	125	20
M81714/23-1*003	1/4	125	20
M81714/23-1*004	3/8	125	20
M81714/23-1*005	1/2	125	20
M81714/23-1*006	3/4	125	20
M81714/23-1*007	1	125	20
M81714/23-1*008	1-1/2	125	20
M81714/23-1*009	2	125	20
M81714/23-1*010	2-1/2	125	20
M81714/23-1*011	3	125	20
M81714/23-1*012	3-1/2	125	20
M81714/23-1*013	4	125	20
M81714/23-1*014	5	125	20
M81714/23-1*015	7	125	20
M81714/23-1*016	10	125	20

*CLASS A, B OR C
(INACTIVE FOR NEW DESIGN FOR AIR FORCE USE)

Downloaded from http://www.everyspec.com

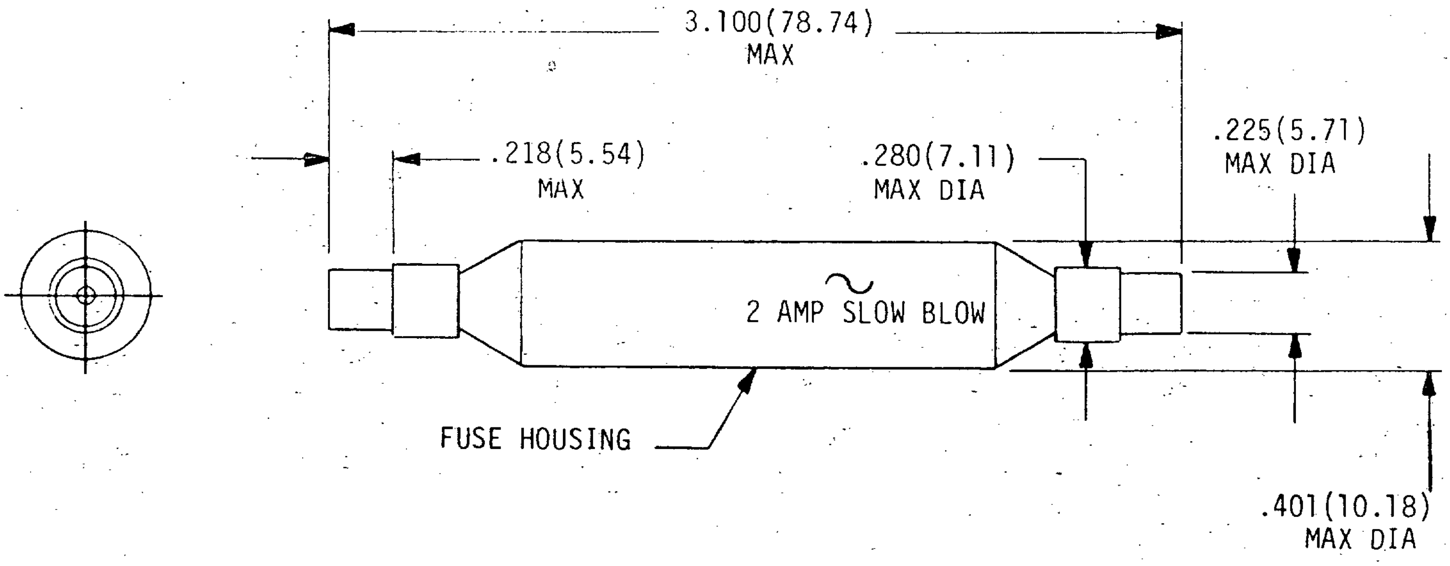

Style 2 Splice Fuse

PART NUMBER	FUSE RATING		CONTACT	
	AMPS	VOLTS	QTY	SIZE
M81714/23-2*001	1/16	125	2	20
M81714/23-2*002	1/8	125	2	20
M81714/23-2*003	1/4	125	2	20
M81714/23-2*004	3/8	125	2	20
M81714/23-2*005	1/2	125	2	20
M81714/23-2*006	3/4	125	2	20
M81714/23-2*007	1	125	2	20
M81714/23-2*008	1-1/2	125	2	20
M81714/23-2*009	2	125	2	20
M81714/23-2*010	2-1/2	125	2	20
M81714/23-2*011	3	125	2	20
M81714/23-2*013	4	125	2	20
M81714/23-2*014	5	125	2	20
M81714/23-2*015	7	125	2	20
M81714/23-2*016	10	125	2	20

* CLASS A, B OR C
(INACTIVE FOR NEW DESIGN FOR AIR FORCE USE)

Downloaded from http://www.everyspec.com

TERMINAL JUNCTION SYSTEM
SPLICES, DOUBLE, ELECTRONIC, INTEGRAL DIODE (S)
(Applicable Specification: MIL-T-81714/24)

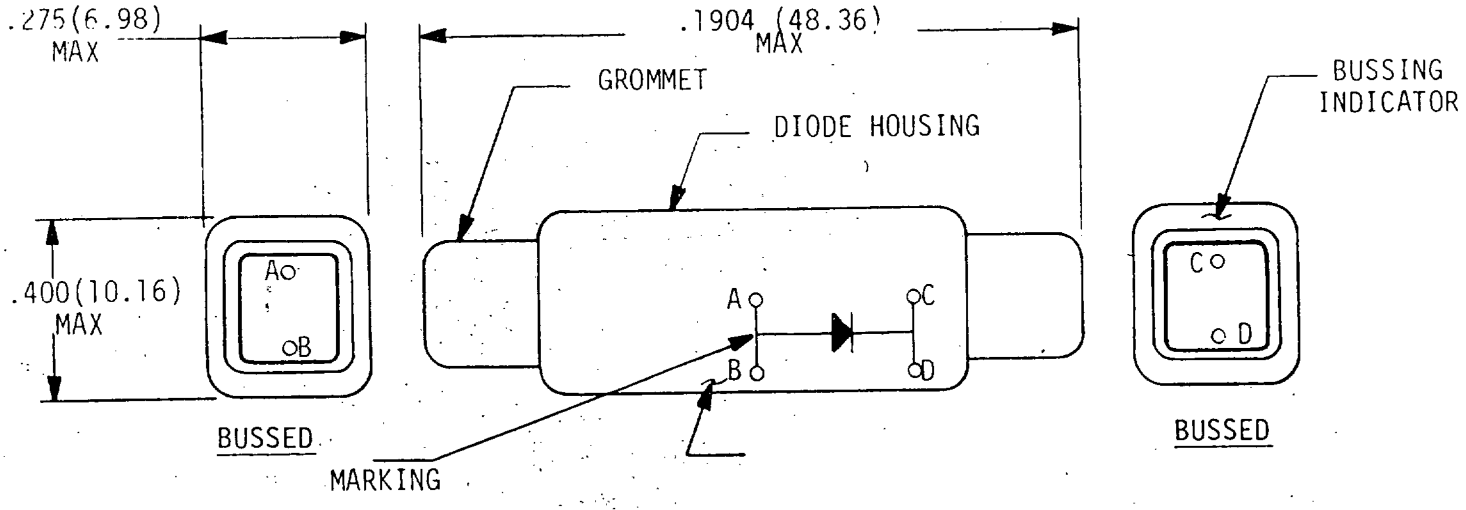

Style 1, Single Diode Splice

PART NUMBER	DIODE P/N	CONTACTS QTY	CONTACTS SIZE
M81714/24-1*001	JAN IN5618	4	22
M81714/24-1*002	JAN IN5618	4	20

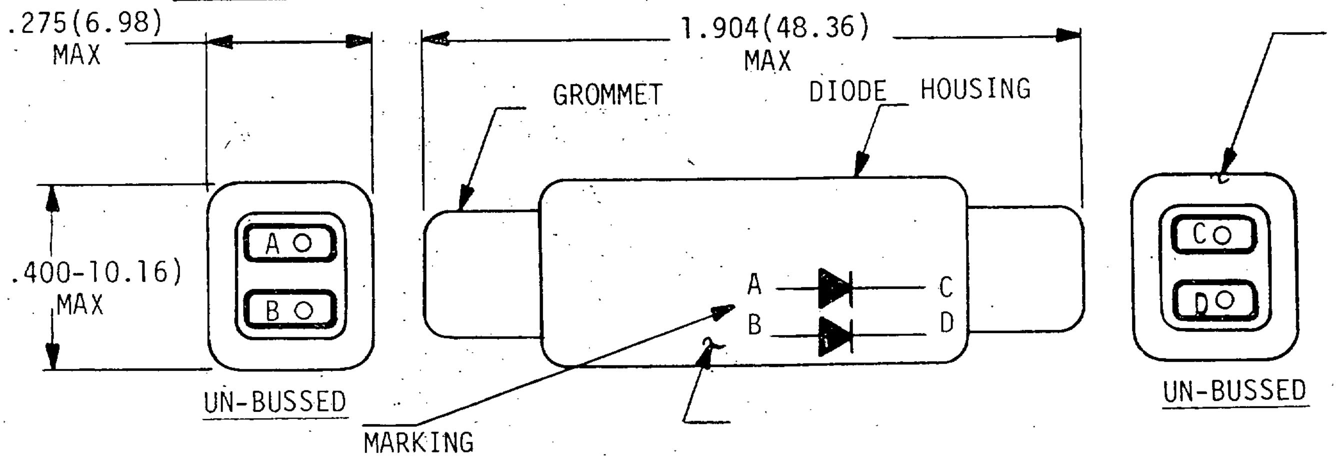

Style 2, Two Diode Splice

PART NUMBER	REF	DIODE P/N	CONTACTS QTY	CONTACTS SIZE
M81714/24-2*001	DI	JAN IN5618	4	22
	D2	JAN IN5618	4	22
M81714/24-2*002	DI	JAN IN5618	4	20
	D2	JAN IN5618	4	20

* CLASS A, B OR C
(INACTIVE FOR NEW DESIGN FOR AIR FORCE USE)

Downloaded from http://www.everyspec.com

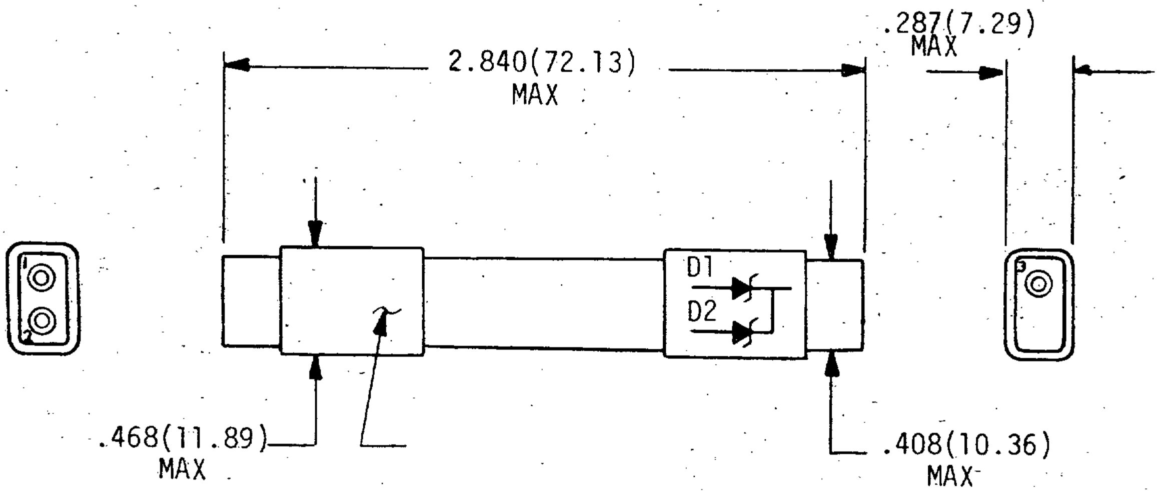

Style 3, Two Diodes (Zener & Low Power Rectifier)

PART NUMBER	REF	DIODE P/N	CONTACT SIZE
M81714/24-3*001	DI D2	IN5333 JAN IN647	16

* CLASS A, B OR C
(INACTIVE FOR NEW DESIGN FOR AIR FORCE USE)

Downloaded from http://www.everyspec.com

SECTION 706

TERMINAL JUNCTION SYSTEMS,
TERMINAL GROUNDING

MIL-T-81714/15

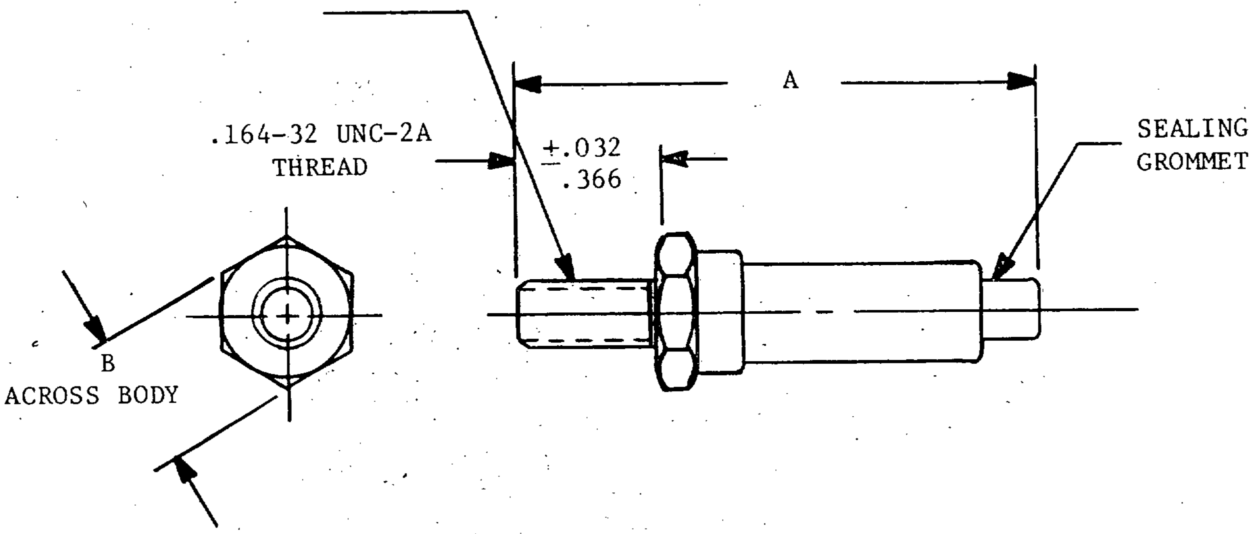

Part number	A	B
M81714/15-22*	1.338 (33.99)	.312 (7.92)
M81714/15-20*	1.338 (33.99)	.312 (7.92)
M81714/15-16*	1.523 (38.68)	.375 (9.53)
M81714/15-12*	1.523 (38.68)	.375 (9.53)

The * in the above table shall be replaced by a terminal class designator, A, B, or C. Example M81714/15-22A: Size 22, Class A Terminal.

(Inactive for New Design for Air Force Use)

Downloaded from http://www.everyspec.com

TERMINAL JUNCTION SYSTEM
GROUNDING MODULES, STUD TYPE MOUNTING

(Applicable Specification: MIL-T-81714/27)

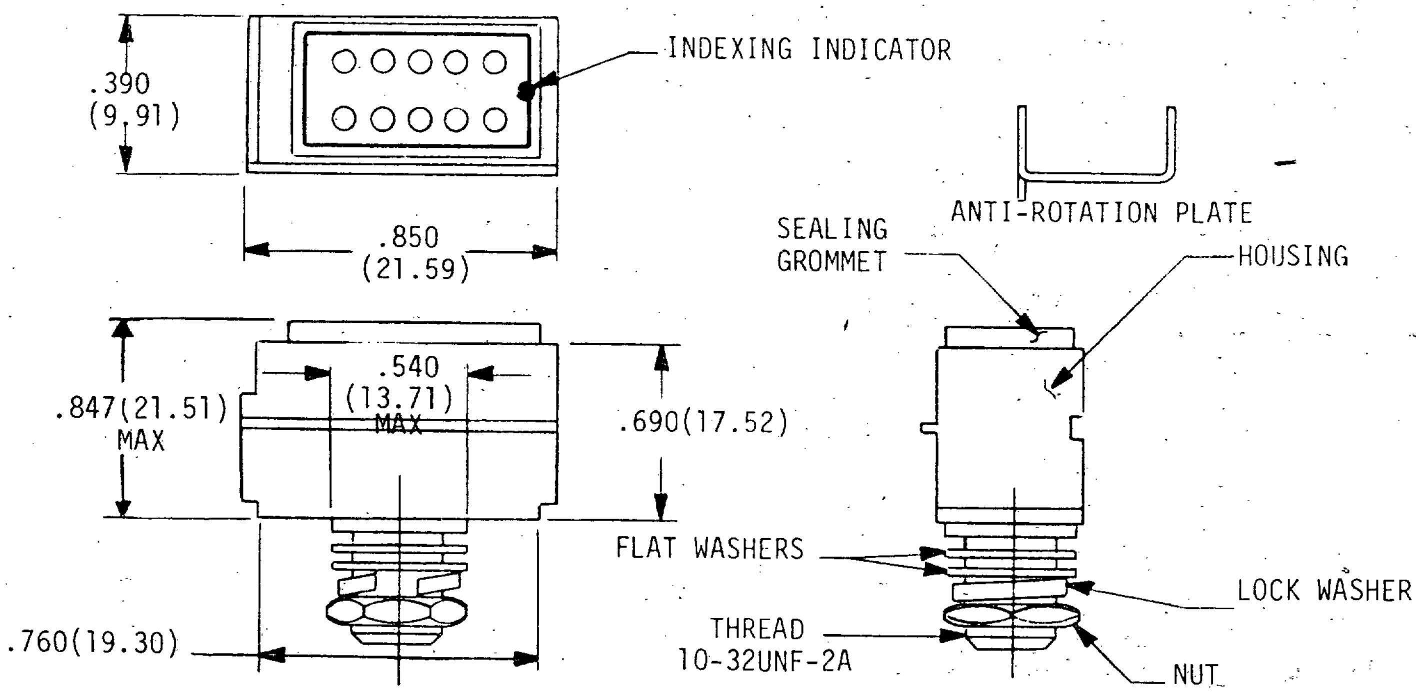

Grounding Modules, Sizes 22 HD, 22 and 20

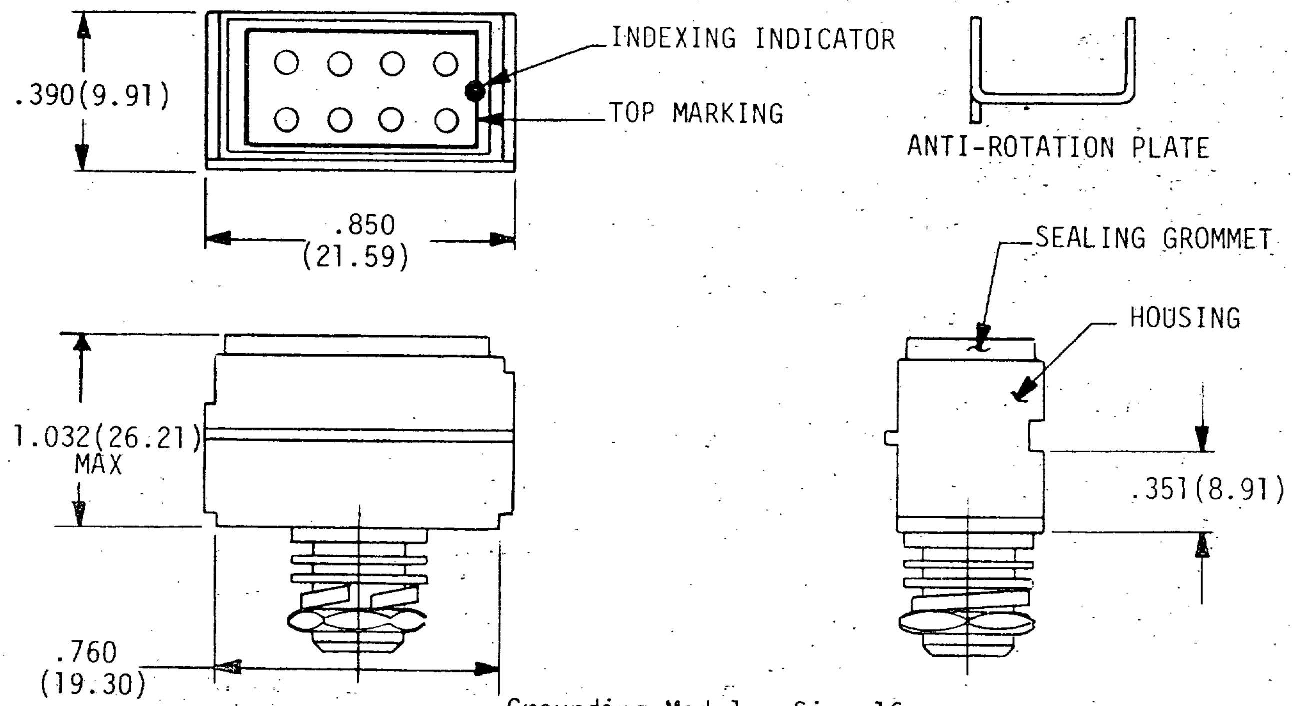

Grounding Module, Size 16

(INACTIVE FOR NEW DESIGN FOR AIR FORCE USE)

Downloaded from http://www.everyspec.com

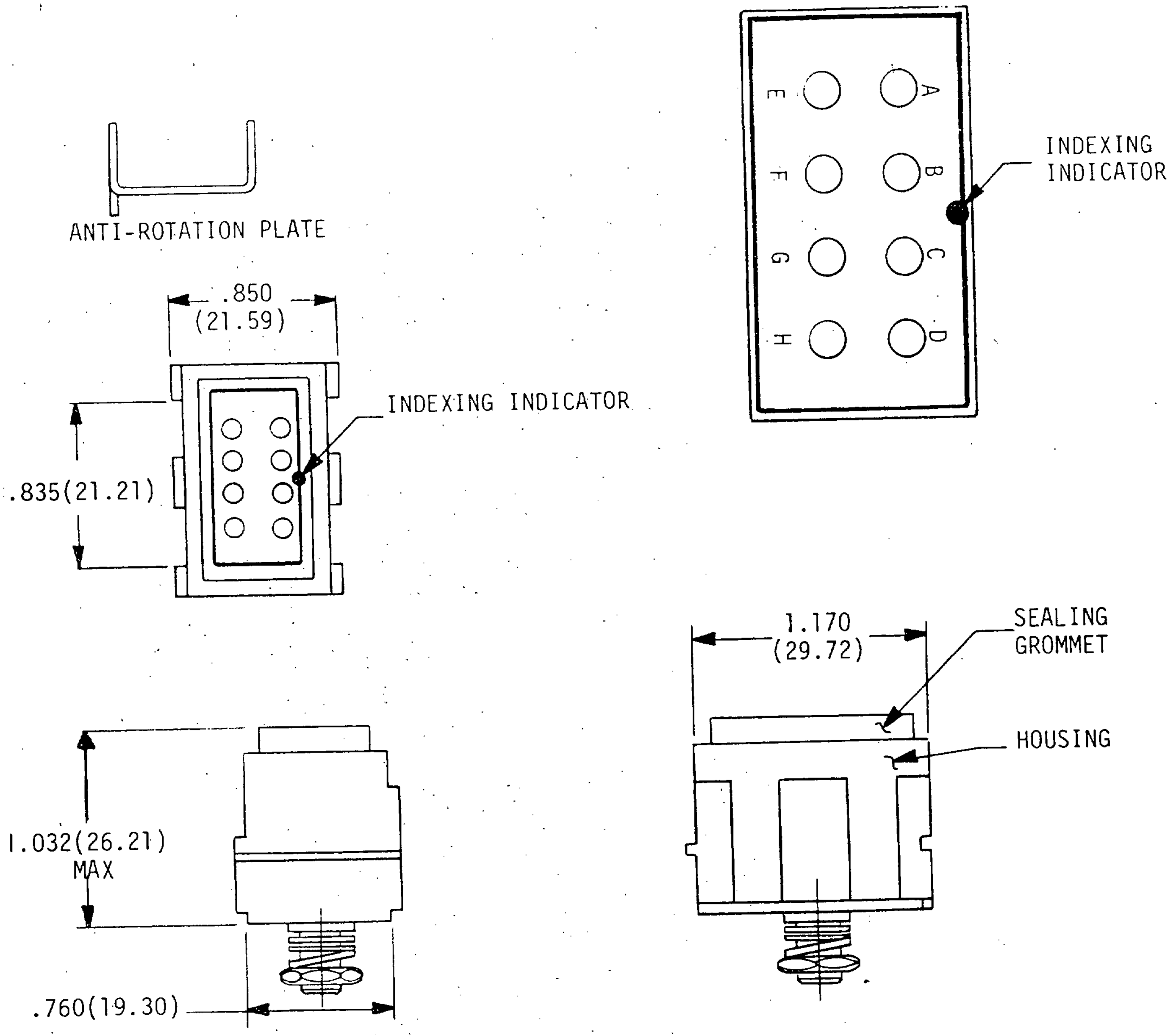

Grounding Module, Size 12

PART NUMBER	CONSISTS OF MODULE BLOCK	
	CONTACTS QTY	SEAL PLUGS QTY
M81714/27-*22HD	23	4
M81714/27-*22	11	2
M81714/27-*20	11	2
M81714/27-*16	9	2
M81714/27-*12	9	2

Downloaded from http://www.everyspec.com

TERMINAL JUNCTION SYSTEM
GROUNDING MODULES, INTEGRAL BRACKET MOUNTING

(Applicable Specification: MIL-T-81714/28)

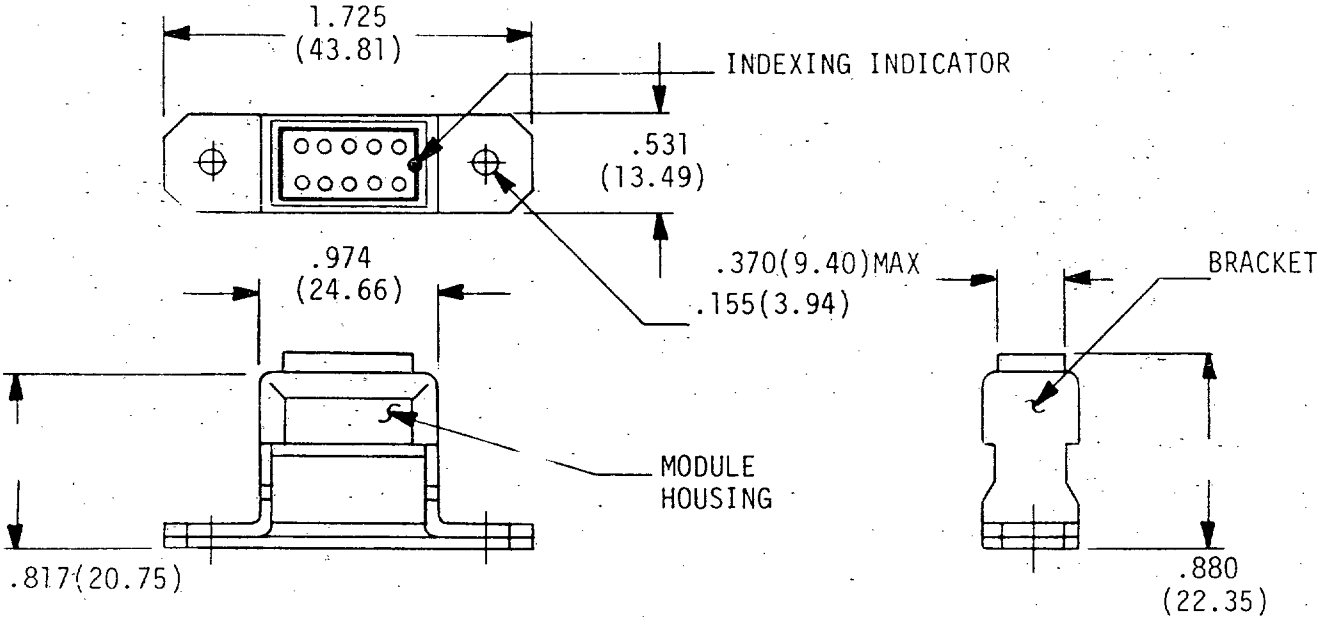

Bracket Mounting Grounding Modules: Sizes 22 HD, 22, and 20.

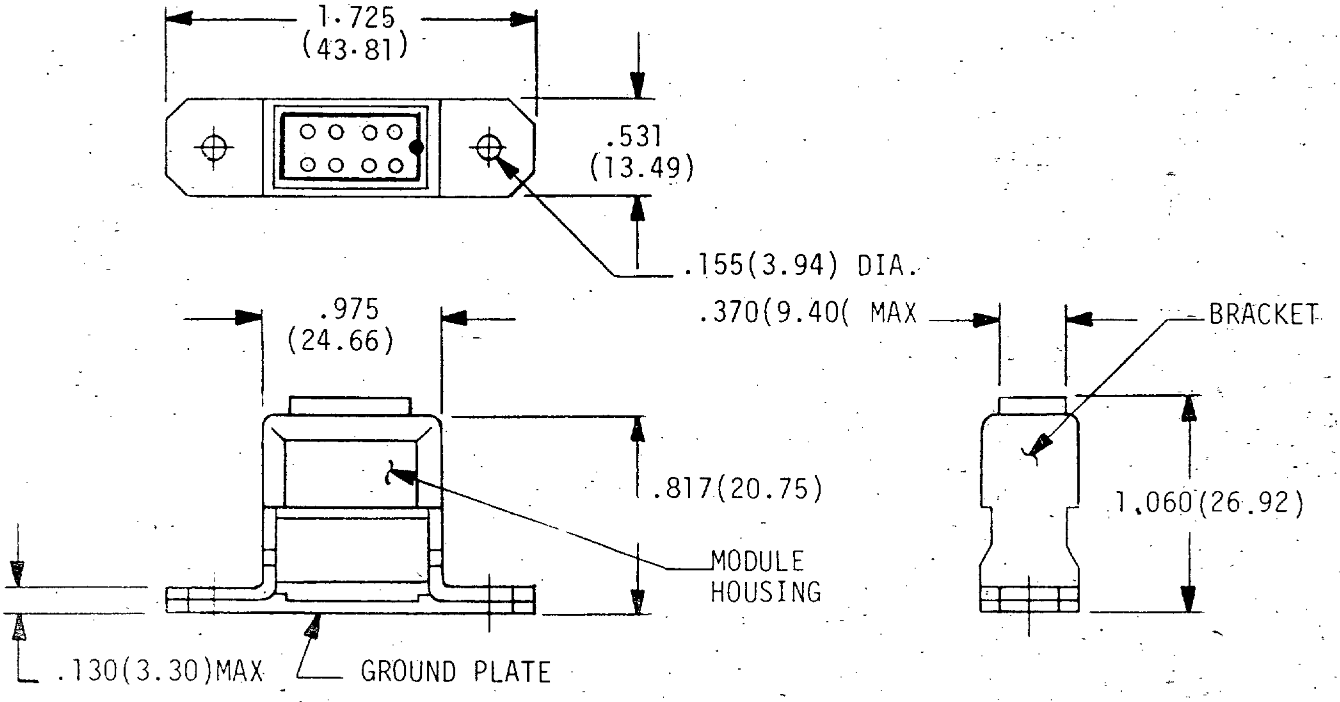

Bracket Mounting Grounding Modules: Size 16
(INACTIVE FOR NEW DESIGN FOR AIR FORCE USE)

Downloaded from http://www.everyspec.com

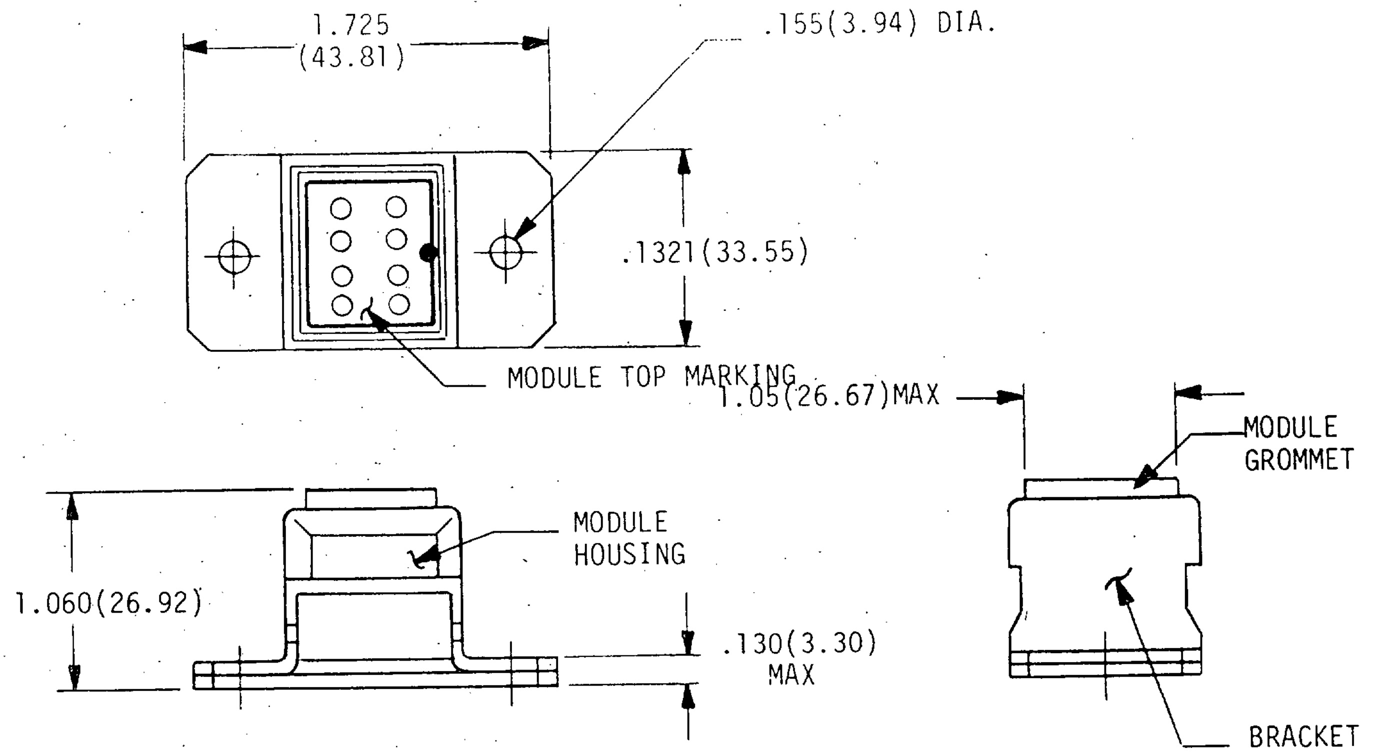

Bracket Mounting Grounding Module: Size 12

PART NUMBER	CONSISTS OF MODULE BLOCK	
	CONTACTS QTY	SEALING PLUGS QTY
M81714/28-*22HD	23	9
M81714/28-*22	11	2
M81714/28-*20	11	2
M81714/28-*16	9	2
M81714/28-*12	9	2

(INACTIVE FOR NEW DESIGN FOR AIR FORCE USE)

Downloaded from http://www.everyspec.com

(This page left blank)

Downloaded from http://www.everyspec.com

SECTION 707

TERMINAL JUNCTION SYSTEM
BRACKET, MODULE MOUNTING

(Applicable Specification: MIL-T-81714/29)

PART NUMBER: M81714/29-1

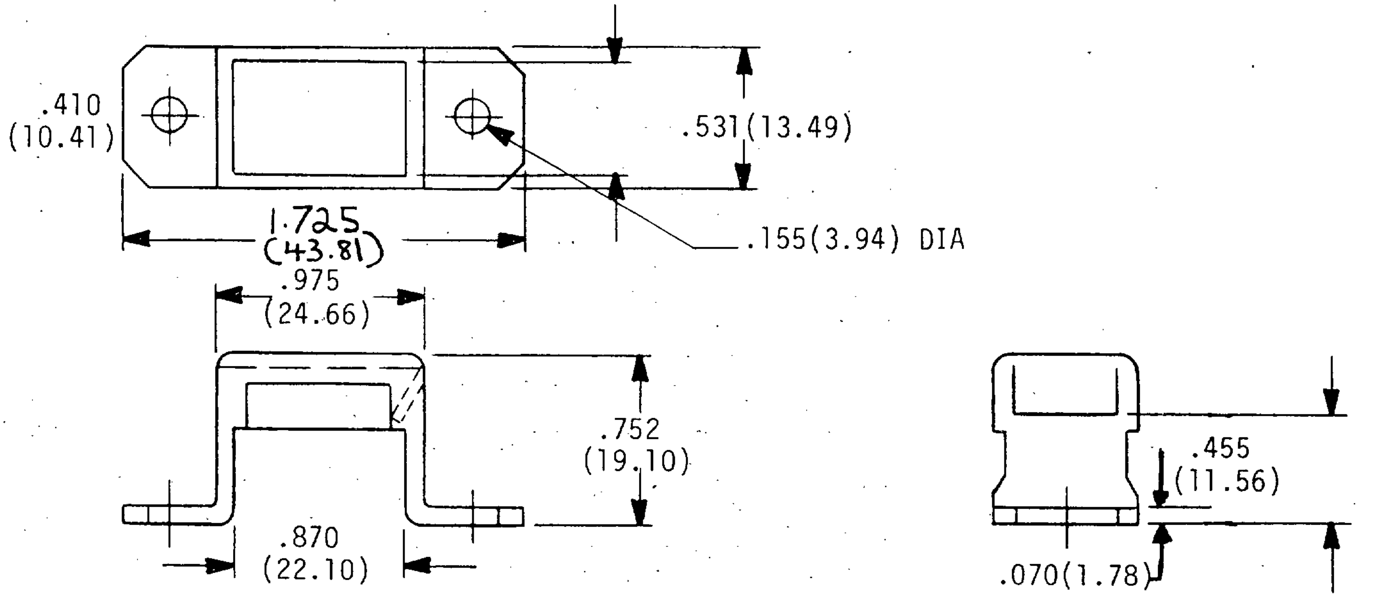

Style 1, mounting bracket for one size 22 HD, 22, 20 or 16 modules.

PART #M81714/29-2

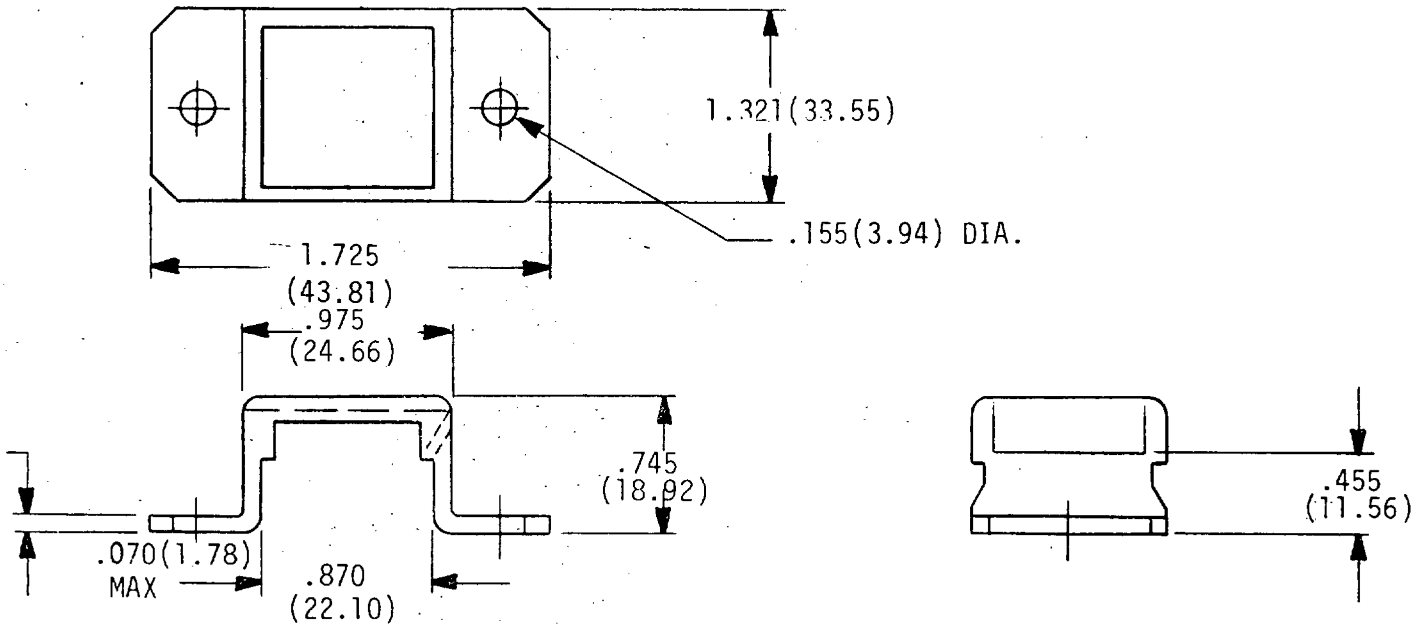

Style 2, mounting bracket for one size 12 or 3 size 22 HD,22,20 or 16 modules.
(INACTIVE FOR NEW DESIGN FOR AIR FORCE USE)

Downloaded from http://www.everyspec.com

(This page left blank)

Downloaded from http://www.everyspec.com

SECTION 800

CAP, WIRE END

Section		Applicable document
801	Cap, Wire End, Type II, Class 1	MIL-T-7928

☆ U.S. GOVERNMENT PRINTING OFFICE: 1987–704-036/70261

Downloaded from http://www.everyspec.com

(This page left blank)

Downloaded from http://www.everyspec.com

SECTION 801

CAP, WIRE END, TYPE II, CLASS I

MS25274

(Applicable Specification: MIL-T-7928)

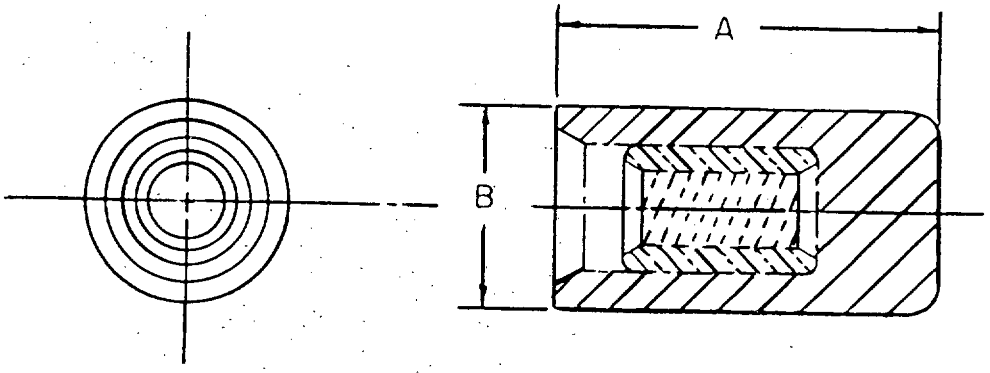

PART NUMBER	WIRE SIZE	A MAX	B MAX
MS25274-1	26-24	.480	.215 (5.46)
MS25274-3	22-18	.480	.215 (5.46)
MS25274-4	16-14	(12.19)	.245 (6.22)
MS25274-4	12-10	(12.19)	.315 (8.00)

Downloaded from http://www.everyspec.com

(This page left blank)